Service Manual

CB TRANSCEIVER

Model JACKSON

UT-547C/D

uniden®

CORPORATION

TABLE OF CONTENTS

A. SPECIFICATIONS

B. INSTALLATION

C. GENERAL INFORMATION

D. OPERATING CONTROLS

E. ALIGNMENT PROCEDURES

F. FREQUENCIES

G. BLOCK DIAGRAM

H. SCHEMATIC DIAGRAMS/WIRING DIAGRAM/PC BOARD

1. E12-2108 : SCHEMATIC DIAGRAM
2. E12-2108 : REVISED
3. E22-4674 : MAIN PCB PARTS ASSEMBLY TOP VIEW
4. E32-2212 : WIRING DIAGRAM

I. BILL OF MATERIAL : 25 P.S

A. SPECIFICATIONS

1. GENERAL

Channel and Frequency Range	:	226 A Band 26.065 - 26.505 MHz B Band 26.515 - 26.955 MHz C Band 26.965 - 27.405 MHz D Band 27.415 - 27.855 MHz E Band 27.865 - 28.315 MHz
Crystals	:	3
Microphone	:	600 ohms, Dynamic Type
Speaker	:	8 ohms, 3 W
Antenna Connector	:	M Type
Jacks & Connectors	:	Mic 4P EXT. SP -3.5Ø PA. SP -3.5Ø DC Power -3P
Controls	:	Channel Selector, Mode Selector FM-AM-USB-LSB, Mic Gain, ON/OFF Power Switch & Volume, ON/OFF PA Switch & Squelch, RF Gain, Coarse, Fine, Band Selector A-B-C-D-E, Noise Blanker/ ANL Switch, Roger Beep Switch, S/RF-Mod Switch and +10 kHz - Normal Switch
Meter	:	RF Output Power, Signal Strength and Modulation
Illumination	:	Channel Number Indication (LED) RX, TX Indication (LED), Meter Lamp
Size	:	7.784"(W) X 2.36"(H) X 11.22"(D)
Weight	:	5 Pounds (2.2 kgs)
Accessories	:	DC Power Cable with Built-in Fuse, Microphone and Microphone Hanger

2. MEASUREMENT CONDITIONS

a) Power Source	:	13.8 V (DC)
b) Antenna Impedance	:	50 ohms
c) Test Temperature	:	25 ½C
d) AM Modulation Frequency	:	1 kHz
e) FM Modulation Frequency	:	1 kHz
f) SSB Modulation Frequency, Two Tone	:	500 Hz $ 2.400 Hz
g) Mean Signal Input Level	:	1.000 uV
h) Reference AM Modulation Percentage	:	1 kHz 30%

i) Reference FM Deviation : 1.5 kHz

j) Reference Audio Output Power : 0.5 W

k) Audio Frequency : 1 kHz

l) Audio Output Load : 8 ohms Resistive

3. TRANSMITTER	UNIT	NOMINAL	LIMIT
a) Frequency Tolerance at 25 ½ (5 Minutes after Switch on)	AM Hz	± 300	± 1.500
	SSB Hz	± 300	± 1.500
	FM Hz	± 300	± 1.500
b) Carrier Power	AM W	10.0	8.0 - 14.0
	FM W	10.0	8.0 - 14.0
c) PEP Power, Two Tone, SSB	Wpep	21.0	18.0 - 26.0
d) Spurious & Harmonic Emission	AM dB	-50	-40
	SSB dB	-50	-40
	FM dB	-50	-40
e) Carrier Suppression	SSB dB	-55	-40
f) Unwanted Sideband Suppression (at 2.500 Hz 4 Wpep 16 dB Single tone)	SSB dB	-50	-40
g) Battery Drain at no Modulation	AM mA	3.000	4.500
	SSB mA	800	1.500
	FM mA	3.000	4.500
h) Battery Drain			
Am : MAX Modulation	mA	3.000	4.500
SSB: MAX Wpep, Two Tone	mA	3.000	4.500
FM : MAX Modulation	mA	3.000	4.500
i) Modulation Frequency Response (1 kHz, 0dB reference)			
Lower at 450 Hz	AM dB	-4	-10
	SSB dB	-4	-10
	FM dB	-4	-10
Lower at 2.5 kHz	AM dB	-4	-10
	SSB dB	-4	-10
	FM dB	-4	-10
j) Microphone Sensitivity			
AM : For 50% Modulation	mV	1.0	2.0
SSB: For 10 Wpep Output	mV	1.0	2.0
FM : For 1 kHz Deviation	mV	1.0	2.0
k) AMC Range			
AM : 50 - 100% Modulation	dB	50	40
SSB:	dB	50	40

4. RECEIVER (ANL/NB Switch off)	UNIT	NOMINAL	LIMIT
a) Max Sensitivity	AM uV	0.5	2.0
	SSB uV	0.25	1.0
b) Sensitivity for 10dB S/N	AM uV	0.5	2.0
	SSB uV	0.25	1.0
FM : 20dB S/N	FM uV	0.5	3.0
c) AGC Figure of Merit, 50 mV for 10dB change in Audio Output	AM dB	80	70
	SSB dB	80	70
d) Overall Audio Fidelity at 6dB down			
Upper Frequency	AM Hz	2.000	1.500 - 3.000
	SSB Hz	3.000	2.000 - 4.500
	FM Hz	2.500	1.500 - 4.000
Lower Frequency	AM Hz	300	100 - 500
	SSB Hz	300	100 - 500
	FM Hz	300	100 - 500
e) Adjacent Channel Selectivity (10 kHz 1 GEN)	AM dB	70	60
f) Maximum Audio Output Power	AM W	4.0	3.0
	SSB W	4.0	3.0
	FM W	4.0	3.0
g) Audio Output Power at 10% THD	AM W	2.5	2.0
	SSB W	2.5	2.0
	FM W	2.5	2.0
h) RF Gain Control Range	AM dB	55	30 - 70
	SSB dB	55	30 - 70
	FM dB	55	30 - 70
i) S/N Ratio at 1mV Input	AM dB	30	25
	FM dB	35	25
j) Squelch Sensitivity at Threshold	AM uV	0.5	2.0
	SSB uV	0.5	2.0
	FM uV	0.5	2.0
k) Squelch Sensitivity at Tight	AM uV	1.000	250 - 4.000
	SSB uV	1.000	250 - 4.000
	FM uV	1.000	250 - 4.000
l) S Meter Sensitivity at "S-9" (No Modulation)	AM uV	100	25 - 400
	SSB uV	100	25 - 400
	FM uV	100	25 - 400
m) Image Rejection Ratio	AM dB	65	50
	SSB dB	65	50
	FM dB	65	50
n) IF Rejection Ratio	AM dB	85	70
	SSB dB	85	70
	FM dB	85	70
o) Oscillator Dropout Voltage	AM V	9	11
	SSB V	9	11
	FM V	9	11

	UNIT	NOMINAL	LIMIT
p) Battery Drain at No Signal	AM mA	500	800
	SSB mB	500	800
	FM mA	500	800
q) Battery Drain at Max. Audio Output	AM mA	1.000	1.500
	SSB mA	1.000	1.500
	FM mA	1.000	1.500
r) Clarifier Range	AM kHz	± 7.0	More than ± 5.0
	SSB kHz	± 7.0	More than ± 5.0
	FM kHz	± 7.0	More than ± 5.0
5. PUBLIC ADDRESS			
a) Output Power at 10% Distortion	W	2.5	2

NOTE :

1) Shall have reverse polarity protection and operable with positive of negative grounding

2) Operating Power Voltage : 13.8V + 15 - 20% DC

B. INSTALLATION

1. LOCATION

Plan the location of the transceiver and microphone bracket before starting the installation. Select a location that is convenient for operation and does not interfere with the driver or passenger in the vehicle. In automobiles, the transceiver is usually mounted to the dash panel with the microphone bracket beside it.

2. MOUNTING AND CONNECTION

This radio is supplied with a universal mounting bracket. The transceiver is held in the bracket by the four thumb screws. supplied, permitting adjustment to the most convenient angle. The bracket must be mounted with the screws supplied. The mounting surface must be mechanically strong. Proceed as follows to mount the transceiver :

a) After you have determined the most convenient location in your vehicle, hold the radio with the mounting bracket in the exact location desired. If nothing interferes with mounting it in the desired position, remove the mounting bracket thumb screws and mark the mounting holes using the bracket as a template. Before drilling the holes, make sure nothing will interfere with the installation of the mounting screws. Drill the holes and mount the bracket and then install the radio.

b) Connect the antenna cable plug to the standard receptacle on the rear panel. Most CB antennas are terminated with a type PL-259 plug which mates with the receptacle on the rear panel.

c) Connect the DC power input wire with the fuse (red) to +12V DC. This wire extends from a plug which connects to the rear panel. In automobile installations, +12V DC is usually obtained from the accessory contact on the ignition switch. This prevents the set being left on accidentally when the driver leaves the car and also permits operating the radio without the engine running. You can locate the

accessory contact on most ignition switches by tracing the power wire from the AM broadcast receiver in the car.

d) Connect the black wire to ground. This is usually the chassis of the car. Any convenient location with good electrical contact may be used. (remove paint).

Note : See ground connection under GENERAL INFORMATION for more detail.

e) Mount the microphone hanger on the side of the unit or near the unit, using the screws supplied.

C. GENERAL INFORMATION

1. GROUND CONNECTION

This radio may be installed and used in any 12V DC negative or positive ground system vehicle.

a) Negative ground system : Connect the Red power lead from the radio to the positive or (+) battery terminal or other convenient point, and connect the Black power lead to the chassis or vehicle frame or (-) battery terminal.

b) Positive ground system : In the cases of positive ground system, connect the Black power lead from the radio to the negative or (-) battery terminal or other convenient point, and connect the Red power lead to the chassis or vehicle frame or (+) battery terminal.

2. ANTENNA

This radio is designed to operate into a 50 ohm CITIZENS RADIO antenna. Best result will be obtained from your transceiver if you use good antenna and properly install your antenna. (Refer to the antenna installation instructions included with your antenna.)

A vertically polarized quarter-wavelength whip antenna provides the most reliable operation and greater range. The shorter loaded-type whip antennas are more attractive, compact and adequate for applications where the maximum possible distance is not required. Also, the loaded whip antennas do not present the problems of height imposed by the full quarter-wavelength whip.

When installed in a boat, the transceiver will operate most efficiently when the antenna used has been especially designed for marine applications.

Mobile whip antennas utilize the metal body of the vehicle as a ground plane. When mounted on a corner of the vehicle, they are slightly directional, in the direction of the body of the vehicle. For all practical purposes, however, the radiation pattern is non-directional. A slight directional characteristic will be observed only at extreme distances. A standard antenna connector (Type

SO-239) is provided on the transceiver for easy connection to a standard PL-259 cable termination.

Before installing the transceiver in a boat, consult your dealer for information regarding an adequate grounding system and prevention of electrolysis between fittings in the hull and water.

3. BASE STATION OPERATION

To operate the transceiver from your home or office, using regular house current as the power source, you will require a separate power supply capable of supplying 5 amps at a 13.8V'DC output with a nominal input voltage of 220 volts AC, 50/60 Hz. Simply connect the red (+) and black (-) leads to the transceiver to the corresponding DC terminals of the power supply.

NOTE : Do not attempt to operate this transceiver by connecting directly to 220V AC. When an AC power supply is used with the transceiver for base station operation any Citizens Band beam, dipole, ground plane or vertical antenna may be used. A ground plane vertical antenna will provide the most uniform horizontal coverage.

4. REMOTE SPEAKER

The external speaker jack (EXT. SPKR) on the rear panel is used for remote receiver monitoring. The external speaker should have 8 ohms impedance. When the external speaker is plugged in, the internal speaker is disconnected.

5. PUBLIC ADDRESS

An external 8 ohm 4-watt speaker must be connected to the (PA SPKR) jack located on the rear panel when the transceiver is used as a public address system. The speaker should be directed away from the microphone to prevent accoustic feedback. Physical separation or isolation of the microphone and speaker is important when operating the PA at high output levels.

6. OPERATING INSTRUCTIONS

The JACKSON operates on 226 AM/FM channels, 226 Upper Side Band channels and 226 Lower Side Band channels.

When you receive the SSB signal in the proper mode (USB or LSB),

audio sound may be either too high pitched or low pitched, indicating that your receiver may not be tuned to the exact same frequency as the transmitter to which it is listening. The JACKSON is equipped with a Clarifier. By tuning the Clarifier, you can slightly change the frequency of the receiver, so you get a normal tone.

D. OPERATING CONTROLS

Your JACKSON, designed for ease of operation, is provided with the following operating controls :

1. OFF/ON VOLUME : To turn the transceiver on, rotate the control clockwise past click. To turn the transceiver off, rotate the control counterclockwise past click. Rotate the control clockwise for a comfortable audio level.

2. SQUELCH : The squelch control is normally set to a position which eliminates undesired background noise with no signal present. With the audio adjusted to a satisfactory level, rotate the squelch control clockwise to the point where the sound from the speaker is cut off. In this position, there will be no sound from the speaker until a signal is received. In order to hear weak signals, it may be necessary to rotate the squelch control counterclockwise, allowing some background noise to be heard.

3. P.A. SWITCH (on SQUELCH) CONTROL : Full counterclockwise rotation of the squelch control engages the PA function. The PA function should not be used unless an external speaker is connected. In the squelch (or CB) position, the PA function is disabled and the radio will transmit and receive on the selected channel.

4. MODE SELECTION : This switch selects AM, FM, USB, or LSB more of operation. This selector changes the mode of operation of both transmitter and receiver simultaneously. Set the selector to the mode on which you wish to communicate.

5. MIKE GAIN : This control is used to adjust, as required, microphone input sensitivity for optimum amount of modulation in transmit. President Electronics citizen's band transceivers have been designed to permit the user to attain levels of modulation up to 100 % depending on the setting of the microphone gain control, using the microphone provided with the unit. President's automatic compression and peak limiting circuits assure maximum modulation with minimum distortion.

6. RF GAIN : This control is used primarily to optimize reception in strong signal areas. Gain is reduced by counterclockwise rotation of the control.

7. CLARIFIER : The clarifier control is normally set to the center position. This feature has several uses and can greatly enhance receiver operation. First, if a received signal is slightly off frequency, this control can be operated as required to optimize the receiver frequency. The effectiveness of this clarifier feature under these conditions can be observed either by listening for a more readable signal at the speaker or by noting the S-meter reading when the clarifier control is operated. Another effective application of this control is in eliminating adjacent channel interference from strong signals. Operate this control, as required, to obtain minimum adjacent channel interference.

8. METER MODE SWITCH :

   S/RF Position : Meter indicates relative transmitter output power when transmitting, input signal strength when receiving.

   MOD Position : Meter indicates average percentage of modulation.

9. NB/ANL SWITCH : When switch is placed in NB/ANL position, the Automatic Noise Limiter and the RF Noise Blanker are activated simultaneously.

10. + 10KHZ FREQUENCY SHIFT SWITCH : When switch is placed in + 10KHz position, frequency is shifted 10KHz up. On following channels, a channel can be used by setting this switch to + 10KHz position.

Normal	+ 10 KHz
3	3A
7	7A
11	11A
15	15A
19	19A

11. BAND SWITCH : This switch is used to select the band of frequency.

12. CHANNEL SELECTOR : This switch is used to select any one of the 40 Citizens Band channels. Channel 9 has been reserved for emergency communications involving immediate safety of life of individuals or

immediate protection of property.

13. ROGER BEEP SWITCH : When this switch is placed in the ROGER BEEP position, your radio automatically transmits the audio sign at the end of your transmission. The listener can easily note your transmission is over through the sign.

E. ALIGNMENT PROCEDURES

1. ALIGNMENT OF PLL & CARRIER OSCILLATOR PORTION

a) Test Equipment Required

- Oscilloscope
- DC Power Supply (13.8V)
- Frequency Counter (0 - 50MHz)
- DC Voltmeter

b) Alignment Procedure

STEP	PRESET TO	ADJUSTMENT	REMARKS
1	Channel : 40 Mode : AM, RX. Clari : Center Band : E PA/CB : CB	L12	Connect DC Voltmeter to TP-2 (R122). Adjust for 6.0V ±0.1V on DC Voltmeter. Confirm 2V to A Band Channel 1.
2	Same as above except BAND : C Channel : 19 Mode : AM.FM, RX	L13	Connect Oscilloscope to TP-3 (R73). Adjust for maximum reading on Oscilloscope.
3	Same as above	L14	Connect Frequency Counter to TP-3 (R73). Adjust for 16.490Mhz ± 20Hz on the Frequency Counter.
4	Same as Step 2 except Mode : USB, RX	L15	Connect Frequency Counter to TP-3 (R73). Adjust for 16.4925MHz ± 20Hz on the Frequency Counter.
5	Same as Step 4 except Mode : LSB, RX	L16	Connect Frequency Counter to TP-3 (R73). Adjust for 16.4875MHz ±20Hz on the Frequency Counter.
6	Same as above	L24	Connect Frequency counter to TP-4 (R104). Adjust for 10.6975MHz ±20Hz on the Frequency Counter.

STEP	PRESET TO	ADJUSTMENT	REMARKS
7	Same as Step 4	L23	Connect Frequency counter to TP-4 (R104). Adjust for 10.6925MHz ± 20Hz on the Frequency counter.
8	Same as Step 4 except Mode : AM, TX	L22	Connect Frequency counter to TP-5 (R82). Adjust for 10.695MHz ± 20Hz on the Frequency counter.

c) Test Equipment Connection (see following page)

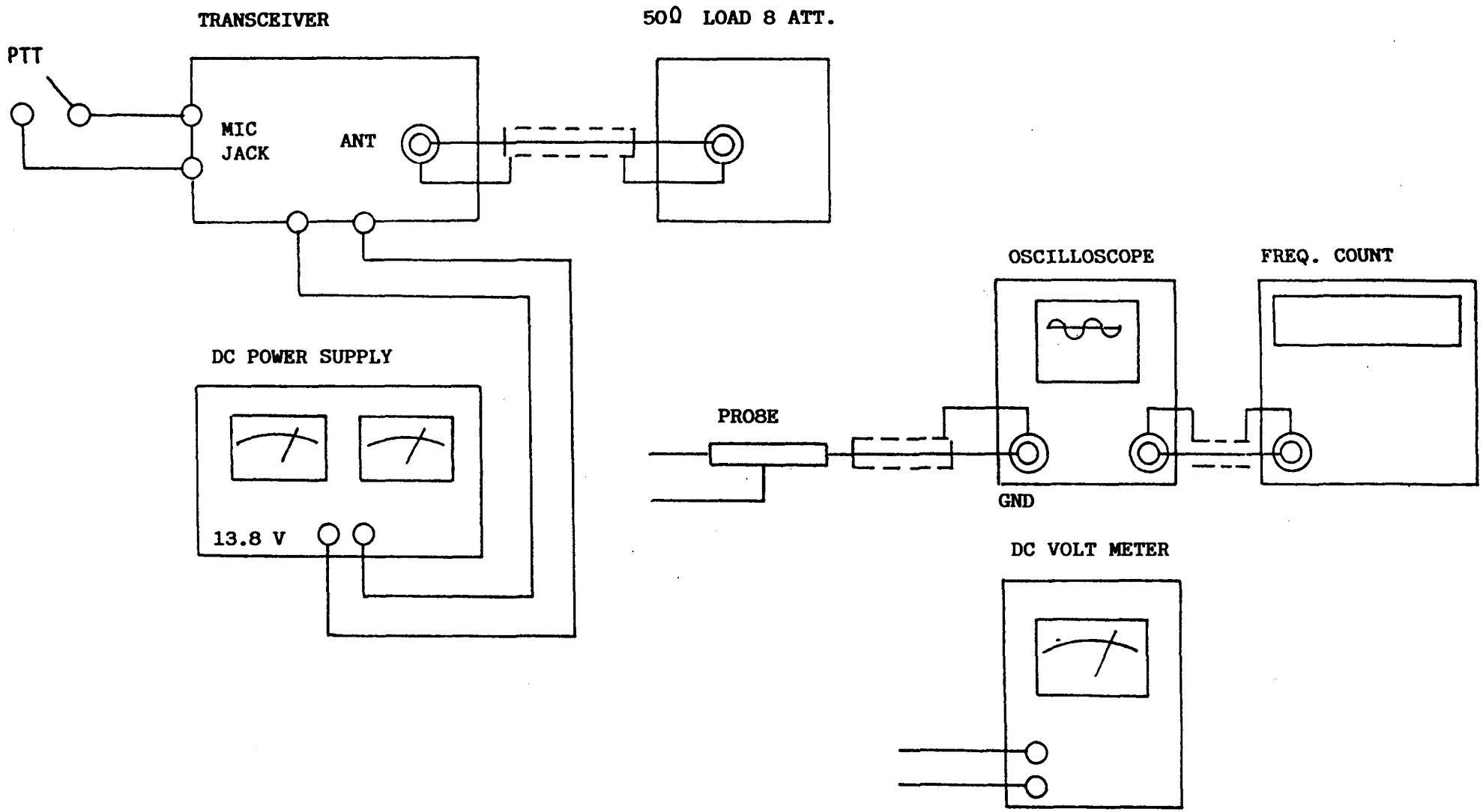
TRANSCEIVER
50Ω LOAD 8 ATT.
PTT
MIC
JACK
ANT
DC POWER SUPPLY
13.8 V
OSCILLOSCOPE
FREQ. COUNT
PROBE
GND
DC VOLT METER

ALIGNMENT POINTS

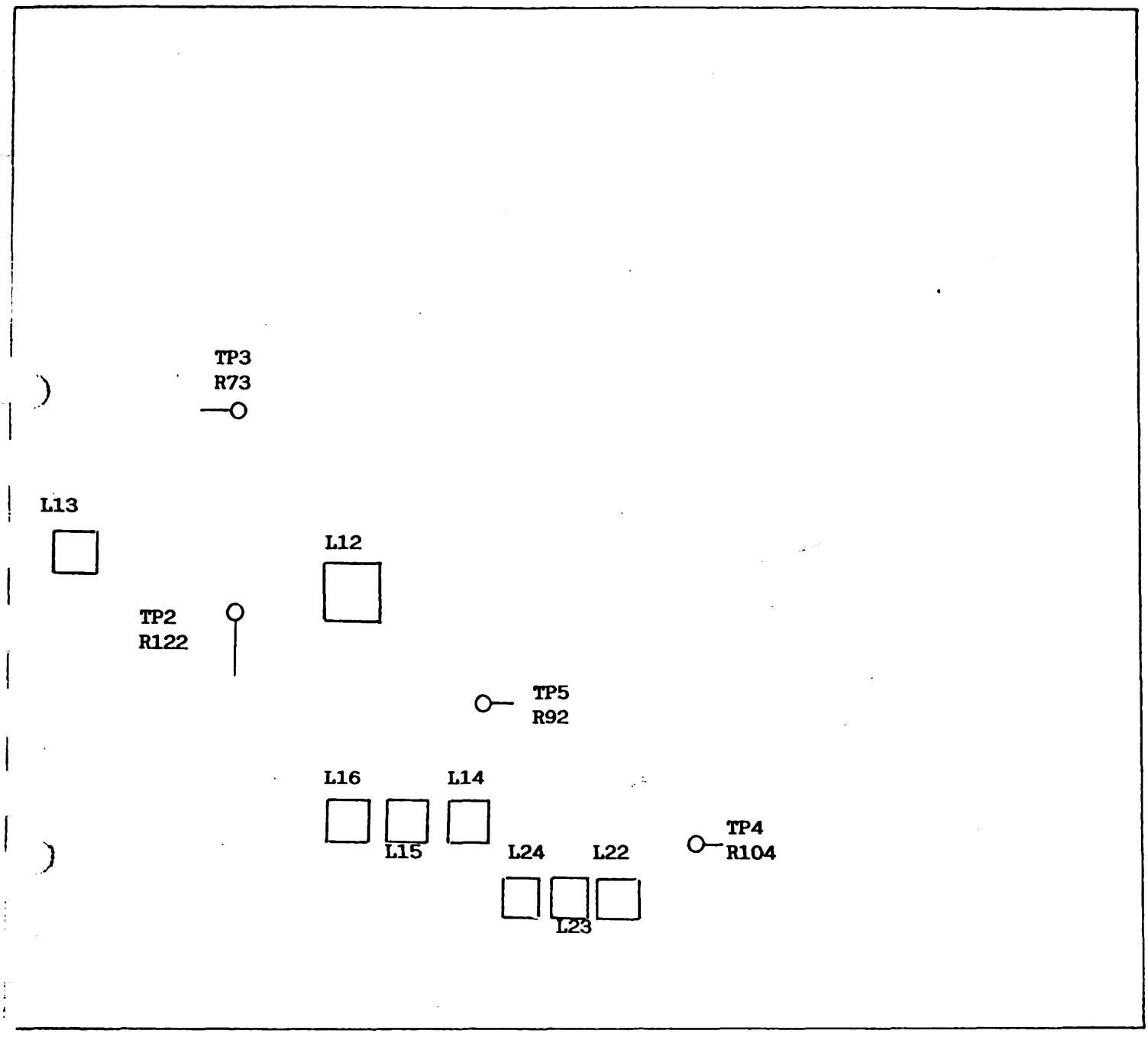

2. ALIGNMENT OF TRANSMITTER PORTION

a) Test Equipment Required

- AF Signal Generator (1) for 500Hz and 1.000Hz
- AF Signal Generator (2) for 2.400Hz
- AF VTVM (150mV full scale)
- RF VTVM (50V full scale)
- RF Powermeter (10W Max. Thruline type)
- 50 ohm Dummy Load
- Oscilloscope
- Harmonic Meter
- DC Voltmeter
- DC Ammeter (150mA full scale)

b) Alignment Procedure

STEP	PRESET TO	ADJUSTMENT	REMARKS
1	Channel : 19 Band : C Mode : USB, TX. No Modulation MIC GAIN : CW PA/CB : CB	VR10	Disconnect the PC-834AA from Check Point of Main P.C.Board and connect DC Ammeter to TP-8(+), TP-6(-). Adjust for 50mA on DC Ammeter.
2	Same as Step 1	VR9	Connect DC Ammeter to TP-8(+), TP-7(-). Adjust VR9 to obtain the current 80mA.
3	Mode : USB	L42	Disconnect the DC Ammeter. Connect PC-834AA to Check Point of Main P.C.Board. Connect power meter, RF VTVM and Oscilloscope. Set VR8 CW maximum. Turn the Cor of L42 CW maximum at the bottom.
4	Same as above	L41,43,49	Adjust coils for the maximum indication. While then, keep output voltage under 25V by adjusting SG.
5	Same as above	L42	Set E Band Channel 40, adjust for maximum reading and then set A Band Channel 1, adjust for minimum difference from E Band Channel 40.
6	Channel : 19 Band : E Mode : USB 2 Tone AF SG : 30mV	L30	Adjust L30 to obtain the maximum indication on the RF VTVM.

STEP	PRESET TO	ADJUSTMENT	REMARKS
7	same as above	VR8	Adjust VR3 to obtain RF output of 32.4V on the RF VTVM.
8	Same as Step 1	VR5	Adjust VR5 to obtain the minimum carrier leakage between USB and LSB.
9	Mode : AM, TX. No Modulation Channel : 19 Band : E	VR11	Adjust VR11 to obtain RF carrier power of 10W on RF Power meter.
10	Same as above except Push SW : S/RF	VR7	Adjust for the needle of Bilt-in Meter to blank zone of TX Power Meter.
11	Same as above except AF SG : 30mV 1KHz Mod.	VR12	Adjust VR12 to obtain 90% (negative) modulation.
12	Same as above except mode : FM	VR4	Connect Deviation meter. Adjust for 3kHz Deviation on Deviation meter.
13	Channel : 19 Band : C Push SW : MOD	VR3	Set AF SG to 50% Modulation, then add 16dB. Adjust VR3 to 100% mudulation indication on the transceiver meter.
14	Channel : 19 Band : C No Modulation Mode : AM	VR6	Adjust Transmitter Frequency for 27.185MHz ± 100Hz.

c) Test Equipment Connection (see following page)

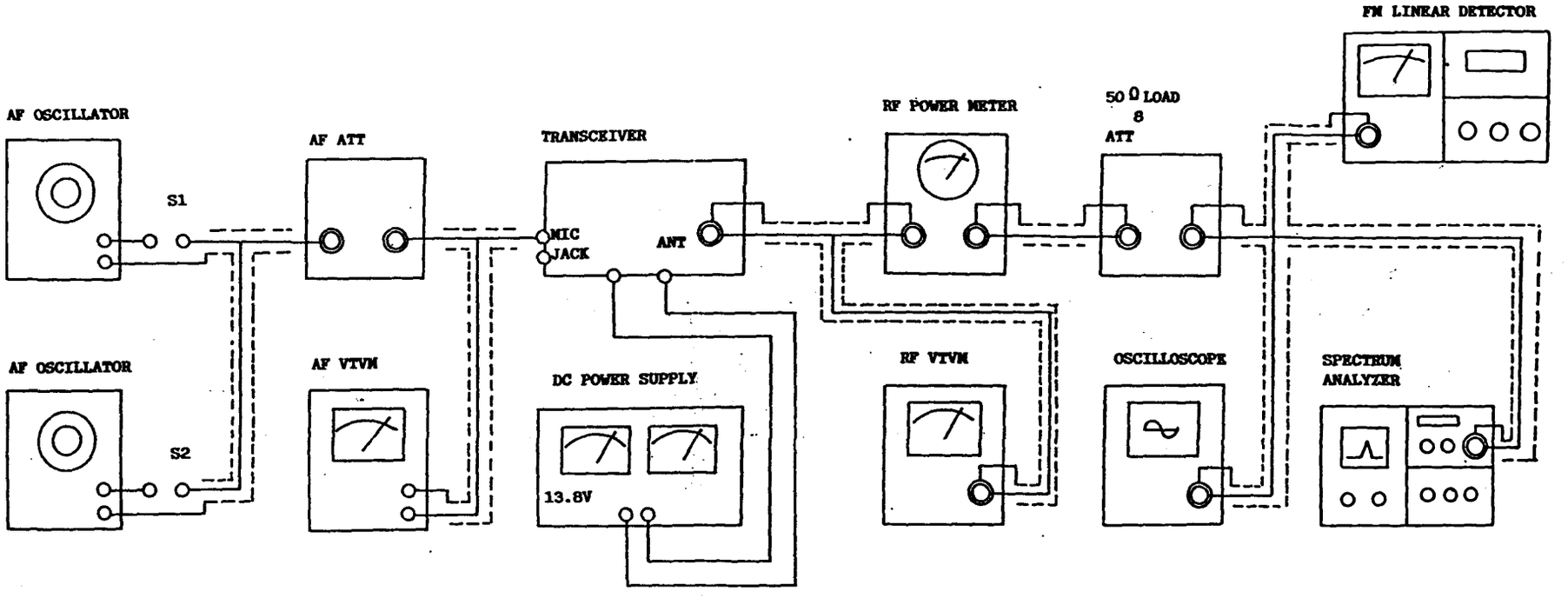
FM LINEAR DETECTOR
AF OSCILLATOR
S1
AF ATT
TRANSCEIVER
MIC JACK
ANT
RF POWER METER
50 Ω LOAD
8
ATT
AF OSCILLATOR
S2
AF VTVM
DC POWER SUPPLY
13.8V
RF VTVM
OSCILLOSCOPE
SPECTRUM ANALYZER

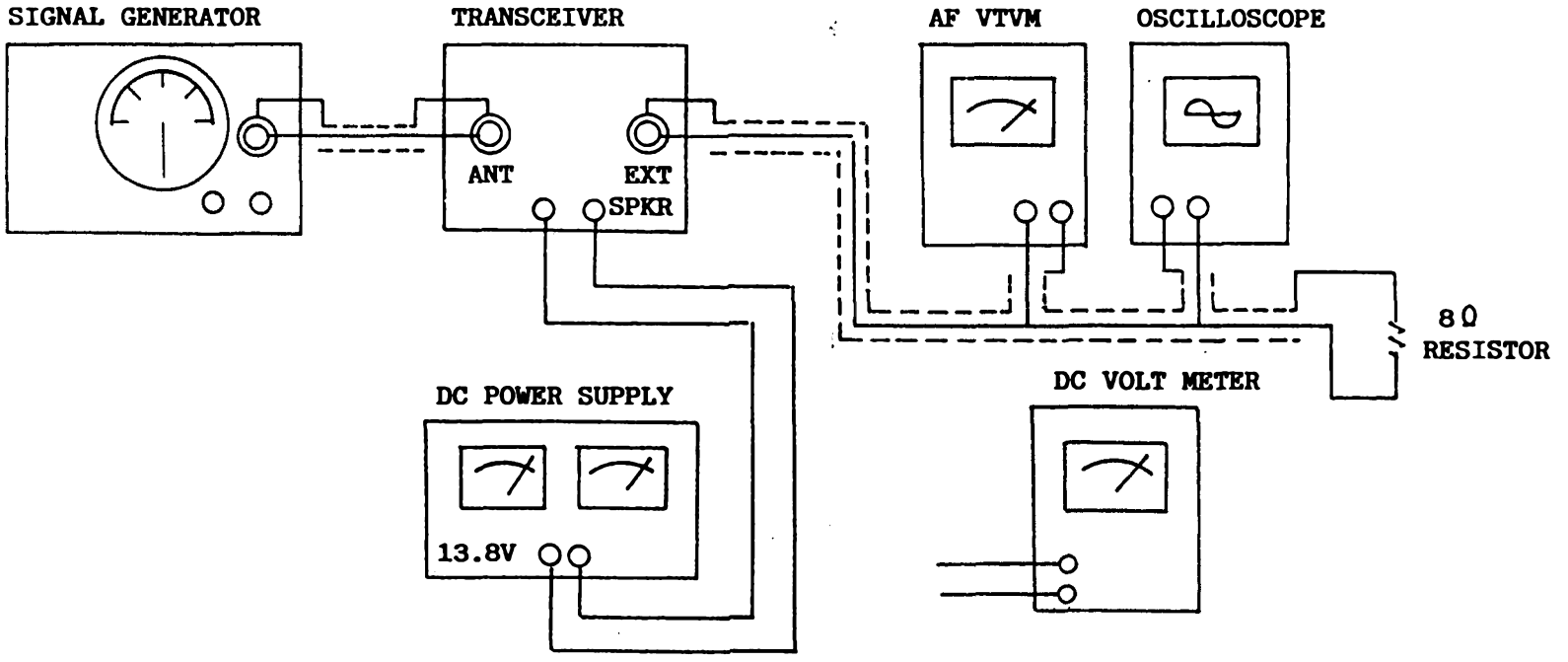
SIGNAL GENERATOR
TRANSCEIVER
AF VTVM
OSCILLOSCOPE
ANT
EXT
SPKR
8Ω
RESISTOR
DC POWER SUPPLY
DC VOLT METER
13.8V

ALIGNMENT POINTS

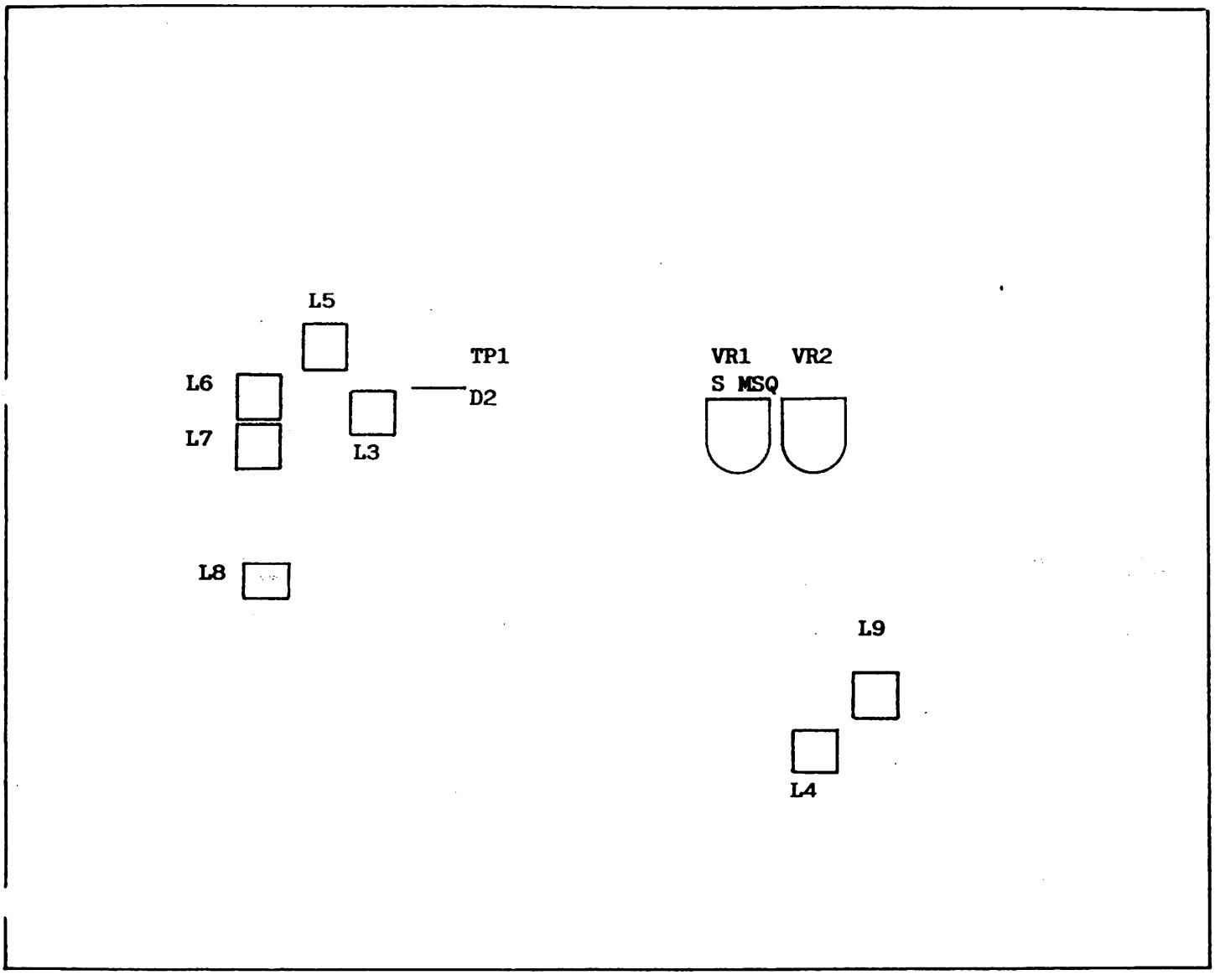

3. ALIGNMENT OF RECEIVER PORTION

a) Test Equipment Required

- RF SSG
- DC Voltmeter
- AF VTVM
- Oscilloscope

b) Alignment Procedure

Connect the AF VTVM and 8 ohm dummy load to EXT SP Jack during the alignment of receiver portion.

STEP	PRESET TO	ADJUSTMENT	REMARKS
1	Channel : 19 Band : C NB/ANL : OFF MOD, S/RF : S/RF PA/SQL : SQL Clari : Center RF GAIN : CW AF VOL : CW MODE : AM		Set RF SG to Channel 19 with 30%, 1kHz modulation.
2	Same as above	L6	Turn the core of L8 to CW. maximum at the bottom.
3	Same as above	L5, 7, 8 9	Set the Unit to C Band Channel 19 AM, adjust coils for maximum reading.
4	Same as above	L6	Set the unit to C Band Channel 1 AM (SSG Channel 1), adjust for maximum reading and then set 1/4 turn CCW.
5	Same as above	VR1	Set the SSG to 100uV output with no-modulation. Adjust VR1 to obtain "S-9" on transceiver's meter.
6	Same as above	VR2	Adjust VR2 to turn off the squelch circuit when SSG output comes up to 1000uV.
7	Same as step 1 except MODE : USB	L3	Set SSG to C Band Channel 18 USB with no-modulation, and output level is 5uV. Connect Oscilloscope to TP-1 (D2) so that adjust for maximum reading.
8	Same as Step 1 except Mode : FM	L4	Set the SSG to FM 1KHz, 1.5KHz Deviation 1mv. Adjust L4 to obtain the maximum indication on Oscilloscope.

ALIGNMENT POINTS

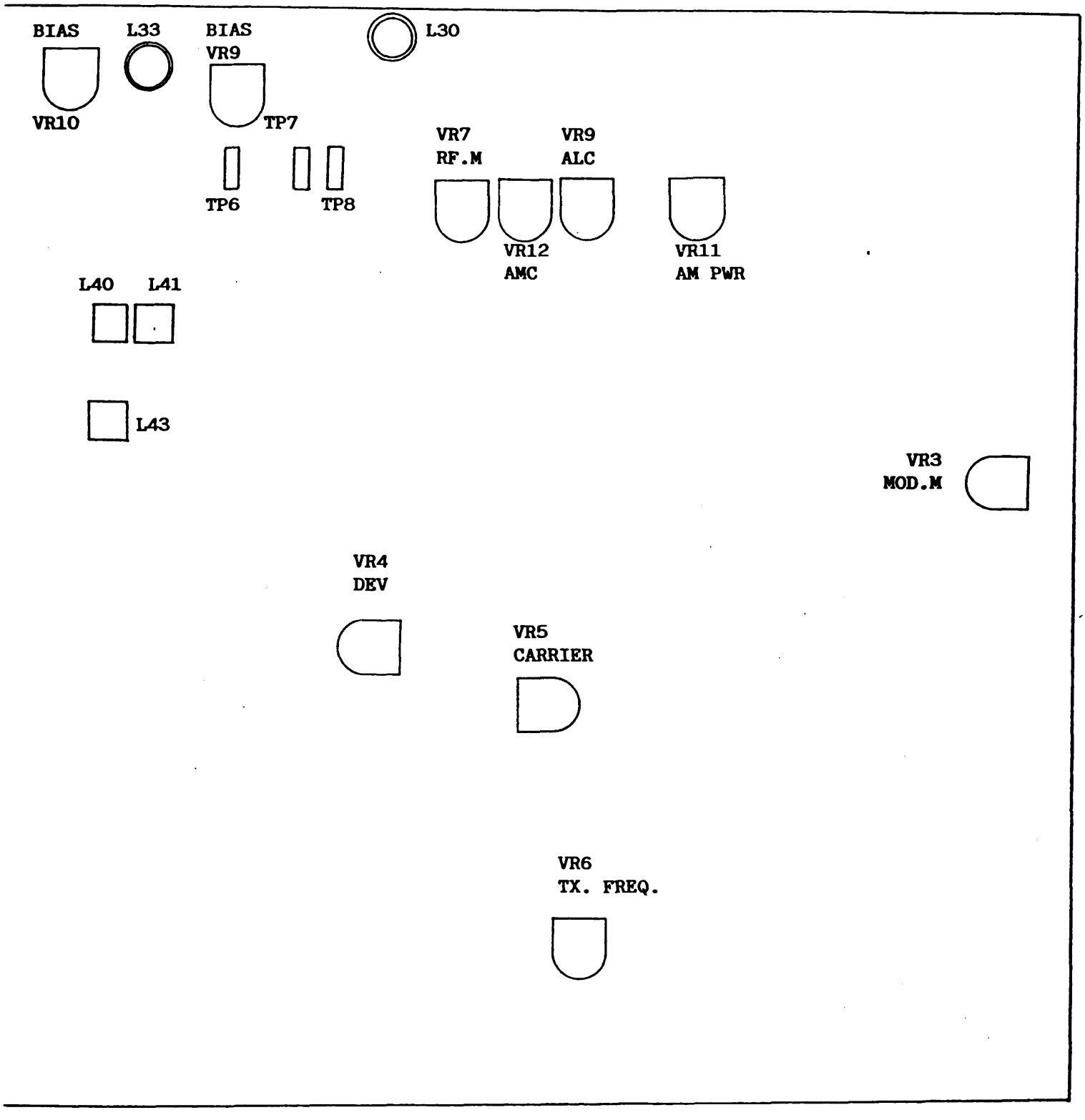

F. FREQUENCIES

CHANNEL	A BAND MHZ	B BAND MHZ	C BAND MHZ	D BAND MHZ	E BAND MHZ
1	26.065	26.515	26.965	27.415	27.865
2	.075	.525	.975	.425	.875
3	.085	.535	.985	.435	.885
4	.105	.555	27.005	.455	.905
5	.115	.565	.015	.465	.915
6	.125	.575	.025	.475	.925
7	.135	.585	.033	.485	.935
8	.155	.605	.055	.505	.955
9	.165	.615	.065	.515	.965
10	.175	.625	.075	.525	.975
11	.185	.635	.085	.535	.985
12	.205	.655	.105	.555	28.005
13	.215	.665	.115	.565	.015
14	.225	.675	.125	.575	.025
15	.235	.685	.135	.585	.035
16	.255	.705	.155	.605	.055
17	.265	.715	.165	.615	.065
18	.275	.725	.175	.625	.075
19	.285	.735	.185	.635	.085
20	.305	.755	.205	.655	.105
21	.315	.765	.215	.665	.115
22	.325	.775	.225	.675	.125
23	.355	.805	.255	.705	.155
24	.335	.785	.235	.685	.135
25	.345	.795	.245	.695	.145
26	.365	.815	.265	.715	.165
27	.375	.825	.275	.725	.175
28	.385	.835	.285	.735	.185
29	.395	.845	.295	.745	.195
30	.405	.855	.305	.755	.205
31	.415	.865	.315	.765	.215
32	.425	.875	.325	.775	.225
33	.435	.885	.335	.785	.235
34	.445	.895	.345	.795	.245
35	.455	.905	.355	.805	.250
36	.465	.915	.365	.815	.265
37	.475	.925	.375	.825	.275
38	.485	.935	.385	.835	.285
39	.495	.945	.395	.845	.295
40	.505	.955	.405	.855	.305

G. BLOCK DIAGRAM

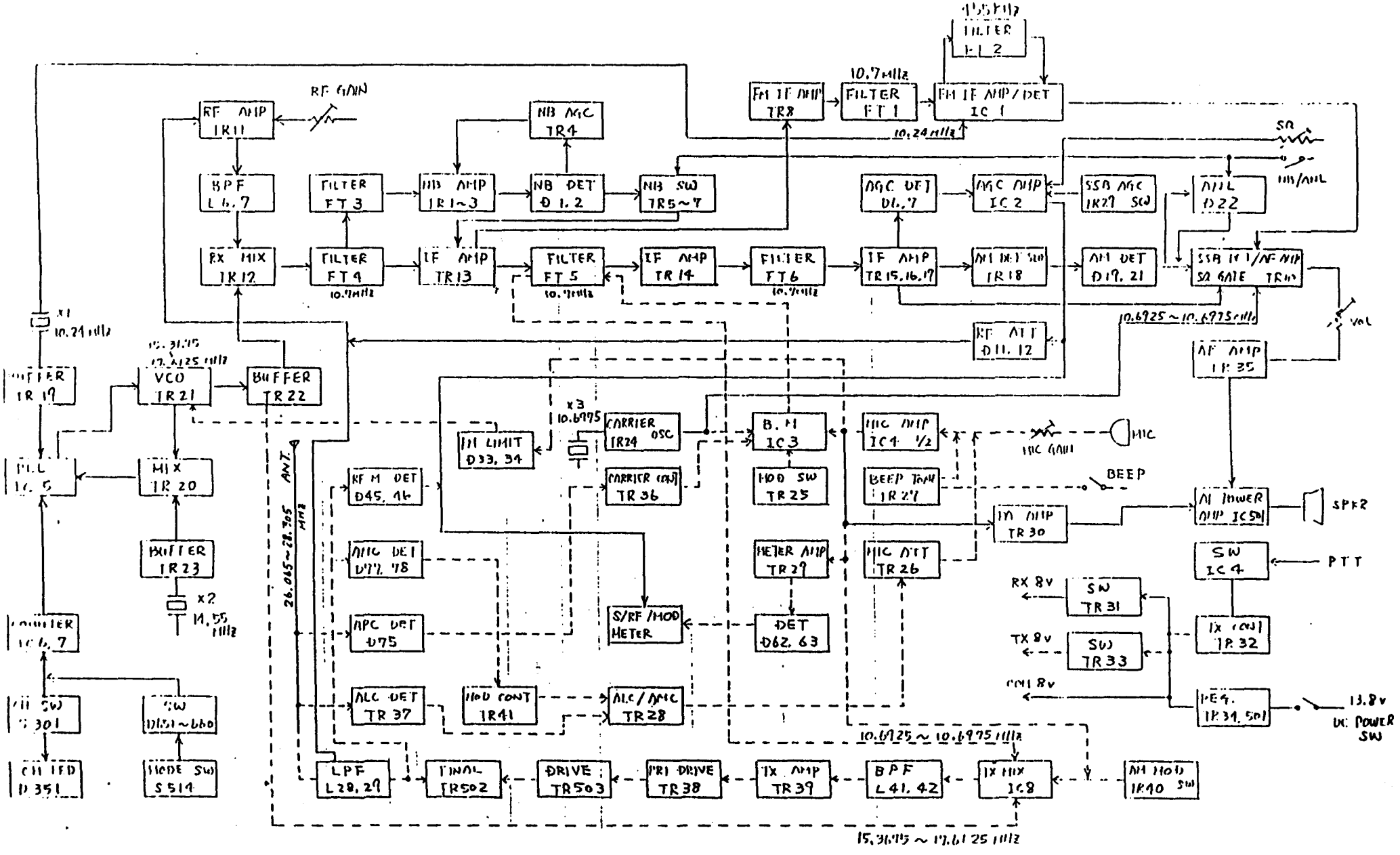
RF AMP IR11
RF GAIN
NB AGC TR4
BPF L6, 7
FILTER FT3
NB AMP IR1~3
NB DET D1, 2
NB SW TR5~7
RX MIX IR12
FILTER FT4
10.7MHz
IF AMP TR13
FILTER FT5
10.7MHz
IF AMP TR14
FILTER FT6
10.7MHz
FM IF AMP TR8
FILTER FT1
FM IF AMP/DET IC1
10.24MHz
FILTER L1, 2
10.7MHz
AGC DET D6, 7
AGC AMP IC2
IF AMP TR15, 16, 17
AM DET SW IR18
AM DET D19, 21
SSB AGC IR29 SW
AM/L D22
SQ
VOL/AVOL
SSB IF I/AF AMP SQ GATE TR30
10.6925~10.6975MHz
RF ATT D11, 12
AF AMP IR35
VOL
X1
10.24MHz
BUFFER IR19
VCO TR21
BUFFER TR22
PLL IC5
MIX TR20
BUFFER IR23
X2
14.55MHz
PRESCALER IC6, 7
CH SW S301
SW D851~860
CH LED D351
MODE SW S514
15.31875~17.4125MHz
26.065~28.305MHz ANT
X3
10.6975
CARRIER OSC IR24
CARRIER (ON) TR36
B. M IC3
MIC AMP IC4 1/2
MIC GAIN
MIC
BEEP
BEEP TONE IR27
MOD SW TR25
IN LIMIT D33, 34
RF M DET D45, 46
MIC DET D77, 78
APC DET D75
ALC DET TR37
MOD CONT IR41
ALC/AMC TR28
S/RF/MOD METER
METER AMP TR29
DET D62, 63
MIC ATT TR26
IN AMP TR30
AM INNER AMP IC5
SPKR
SW IC4
PTT
RX 8V
TX 8V
CONT 8V
SW TR31
SW TR33
TX (ON) TR32
REG. IR34, 50
13.8V DC POWER SW
10.6925~10.6975MHz
LPF L28, 29
FINAL TR502
DRIVE TR503
PRI DRIVE TR38
TX AMP TR39
BPF L41, 42
TX MIX IC8
AM MOD IR40 SW
15.36875~17.6125MHz
TX
RX
JACKSON
UT-547
BLOCK DIAGRAM

H. SCHEMATIC DIAGRAMS/WIRING DIAGRAM/PC BOARDS

PRESIDENT
ELECTRONICS EUROPE
S.A. CAPITAL 20.000.000 F.F. - SIREN SETE 315 230 490

SIEGE SOCIAL
Route de SETE - BP 100
34540 BALARUC - Tél : 67.46.27.27
Télex : 490534F - Fax : 67.48.48.49

SUCCURSALE «ILE DE FRANCE»
50/56, Rue du Pré des Aulnes - Parc d'activités des Arpents
77340 PONTAULT- COMBAULT
Tél : (1) 60.29.28.27 - Fax : (1) 60.28.44.00

BRANCHEMENT PRISE MICRO 6 BROCHES NC 518

N° BROCHES	DESIGNATION CABLES
1	Modulation
2	RX
3	TX
4	Non connectée
5	Masse
6	Alimentation

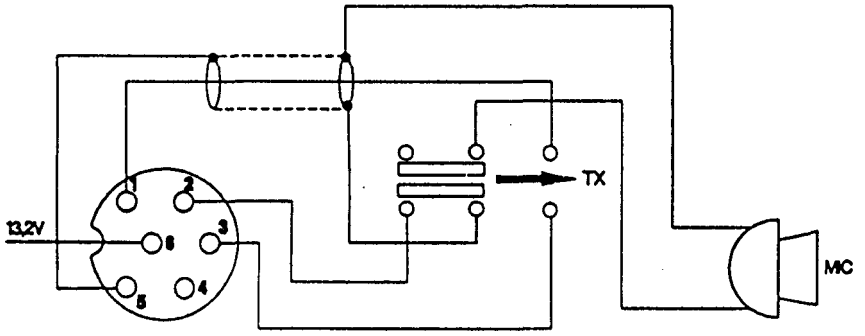

ATTENTION BIEN VERIFIER LE BRANCHEMENT DE LA BROCHE 6

BRANCHEMENT PRISE MICRO 4 BROCHES NC 514

N° BROCHES	DESIGNATION CABLES
1	Masse
2	Modulation
3	TX
4	RX

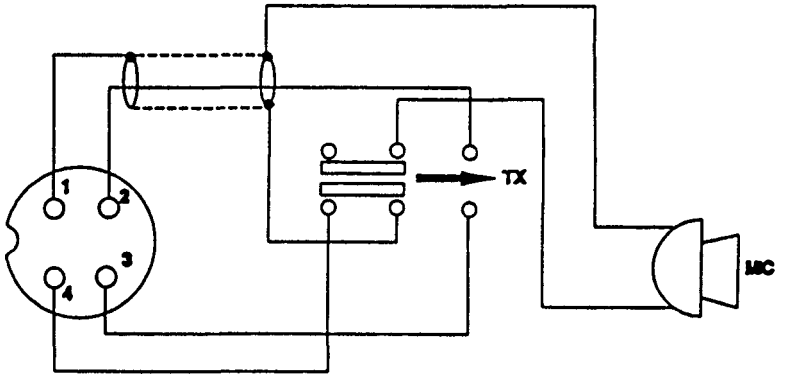

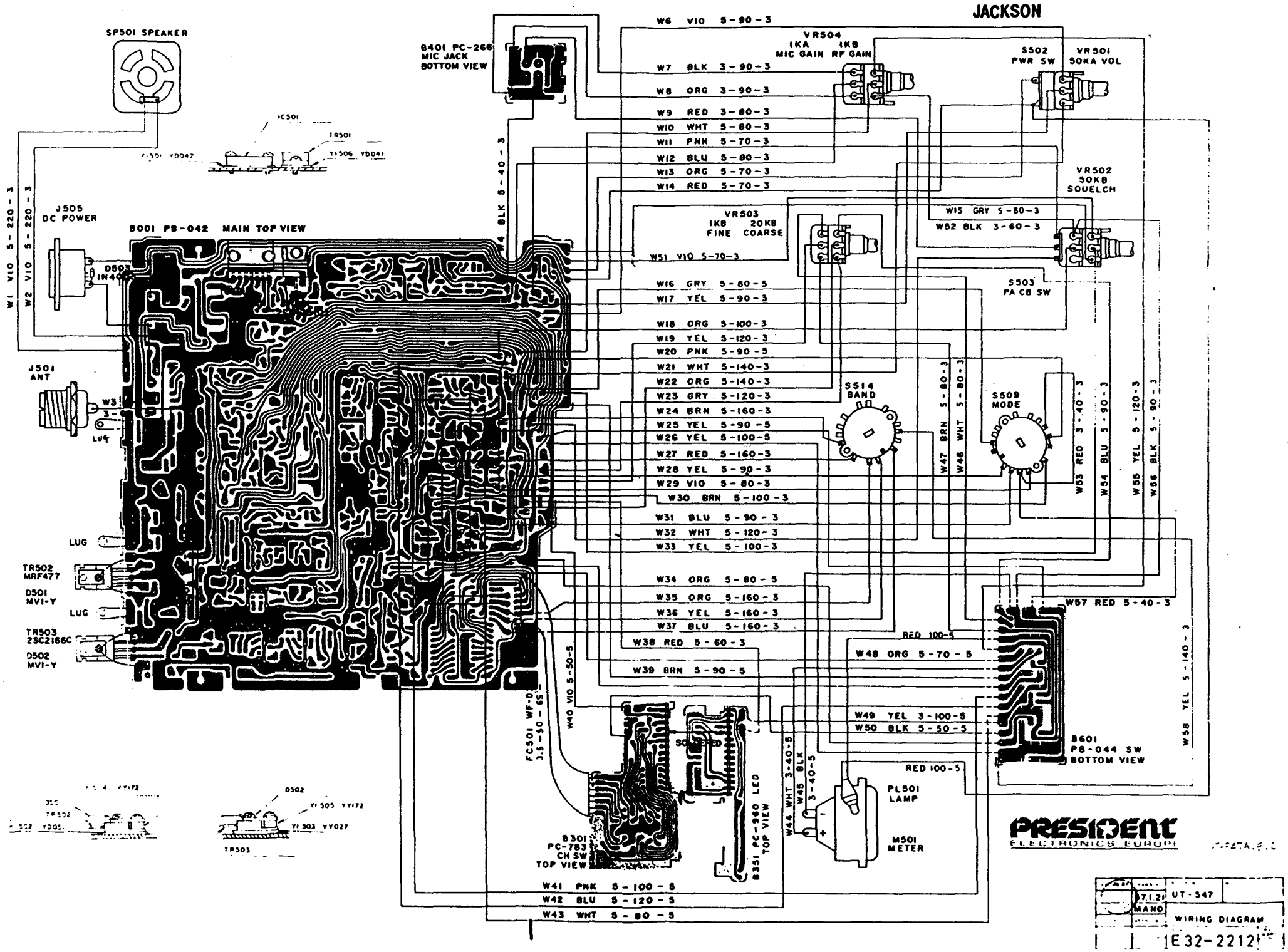
JACKSON
SP501 SPEAKER
B401 PC-266
MIC JACK
BOTTOM VIEW
VR504
1KA 1KB
MIC GAIN RF GAIN
S502
PWR SW
VR501
50KA VOL
VR502
50KB
SQUELCH
VR503
1KB 20KB
FINE COARSE
S503
PA CB SW
J505
DC POWER
B001 PB-042 MAIN TOP VIEW
J501
ANT
S514
BAND
S509
MODE
LUG
TR502
MRF477
D501
MVI-Y
TR503
2SC2166C
D502
MVI-Y
B601
PB-044 SW
BOTTOM VIEW
B301
PC-783
CH SW
TOP VIEW
B351 PC-960 LED
TOP VIEW
PL501
LAMP
M501
METER
W1 VIO 5-220-3
W2 VIO 5-220-3
W4 BLK 5-40-3
W6 VIO 5-90-3
W7 BLK 3-90-3
W8 ORG 3-90-3
W9 RED 3-80-3
W10 WHT 5-80-3
W11 PNK 5-70-3
W12 BLU 5-80-3
W13 ORG 5-70-3
W14 RED 5-70-3
W15 GRY 5-80-3
W52 BLK 3-60-3
W51 VIO 5-70-3
W16 GRY 5-80-5
W17 YEL 5-90-3
W18 ORG 5-100-3
W19 YEL 5-120-3
W20 PNK 5-90-5
W21 WHT 5-140-3
W22 ORG 5-140-3
W23 GRY 5-120-3
W24 BRN 5-160-3
W25 YEL 5-90-5
W26 YEL 5-100-5
W27 RED 5-160-3
W28 YEL 5-90-3
W29 VIO 5-80-3
W30 BRN 5-100-3
W31 BLU 5-90-3
W32 WHT 5-120-3
W33 YEL 5-100-3
W34 ORG 5-80-5
W35 ORG 5-160-3
W36 YEL 5-160-3
W37 BLU 5-160-3
W38 RED 5-60-3
W39 BRN 5-90-5
W40 VIO 5-50-5
W41 PNK 5-100-5
W42 BLU 5-120-5
W43 WHT 5-80-5
W44 WHT 3-40-5
W45 BLK 3-40-5
W46 WHT 5-80-3
W47 BRN 5-80-3
W48 ORG 5-70-5
W49 YEL 3-100-5
W50 BLK 5-50-5
W53 RED 3-40-3
W54 BLU 5-90-3
W55 YEL 5-120-3
W56 BLK 5-90-3
W57 RED 5-40-3
W58 YEL 5-140-3
RED 100-5
PRESIDENT
ELECTRONICS EUROPE
UT-547
WIRING DIAGRAM
E32-2212

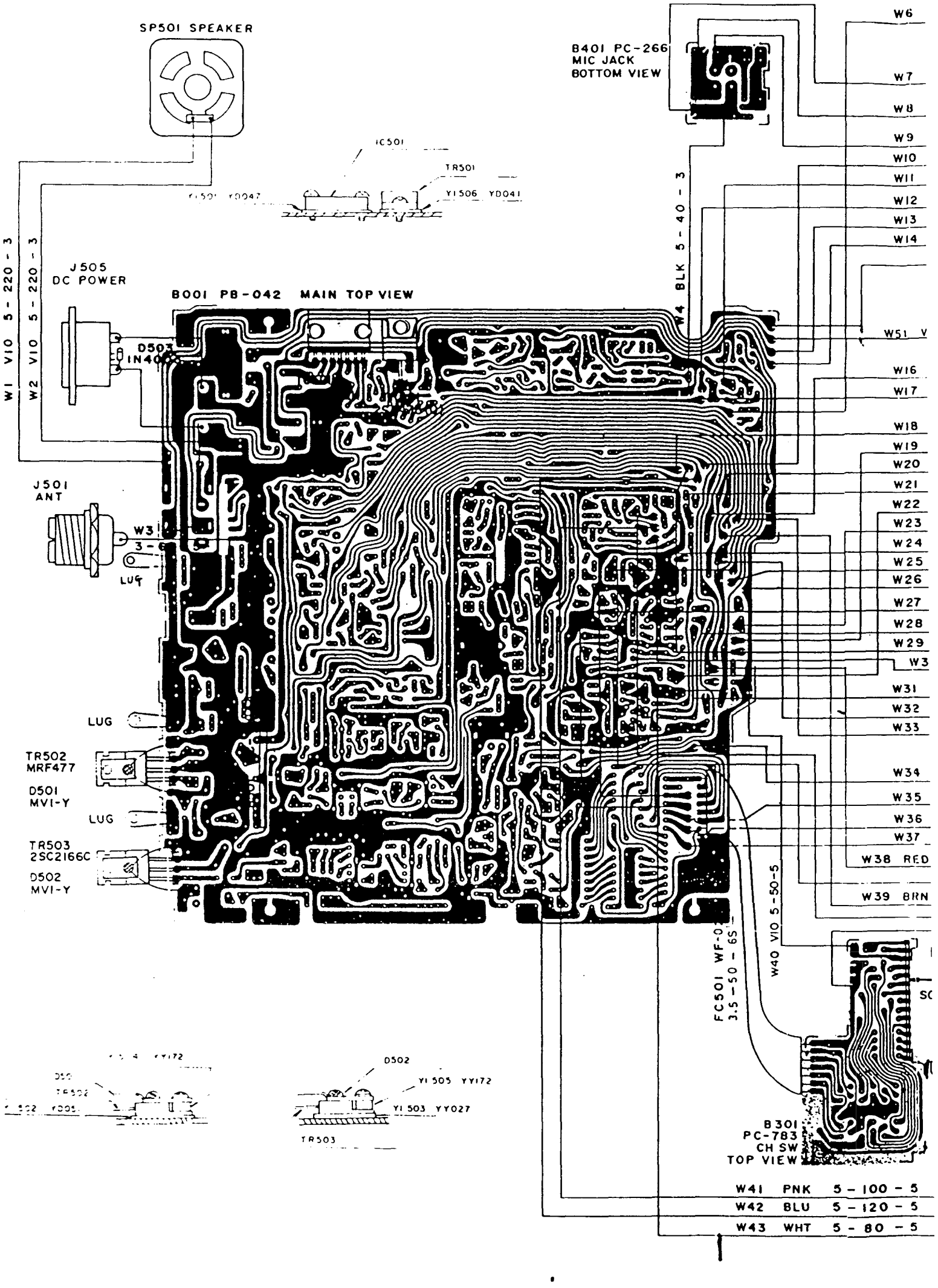
SP501 SPEAKER
B401 PC-266
MIC JACK
BOTTOM VIEW
IC501
TR501
Y1501 YD047
Y1506 YD041
J505
DC POWER
B001 PB-042 MAIN TOP VIEW
W1 VIO 5-220-3
W2 VIO 5-220-3
W4 BLK 5-40-3
D503
IN40
J501
ANT
W3
LUG
LUG
TR502
MRF477
D501
MVI-Y
LUG
TR503
2SC2166C
D502
MVI-Y
W6
W7
W8
W9
W10
W11
W12
W13
W14
W51 V
W16
W17
W18
W19
W20
W21
W22
W23
W24
W25
W26
W27
W28
W29
W3
W31
W32
W33
W34
W35
W36
W37
W38 RED
W39 BRN
W40 VIO 5-50-5
FC501 WF-02
3.5-50-65
B301
PC-783
CH SW
TOP VIEW
W41 PNK 5-100-5
W42 BLU 5-120-5
W43 WHT 5-80-5
D502
Y1505 YY172
Y1503 YY027
TR503

JACKSON

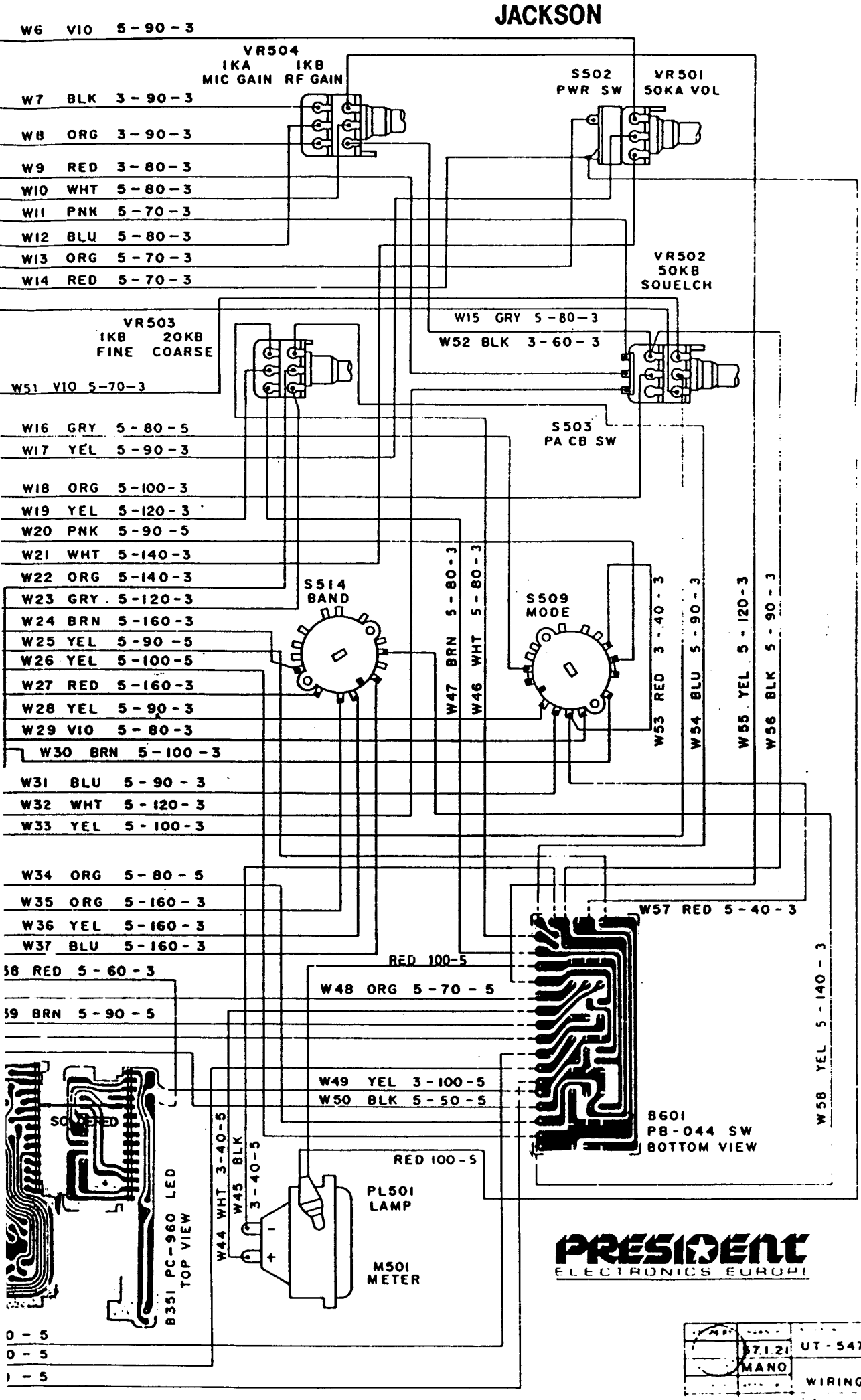

PRESIDENT
ELECTRONICS EUROPE

	87.1.21 MANO	UT-547
		WIRING DIAGRAM
		E32-2212

JACKSON

PRESIDENT
ELECTRONICS EUROPE

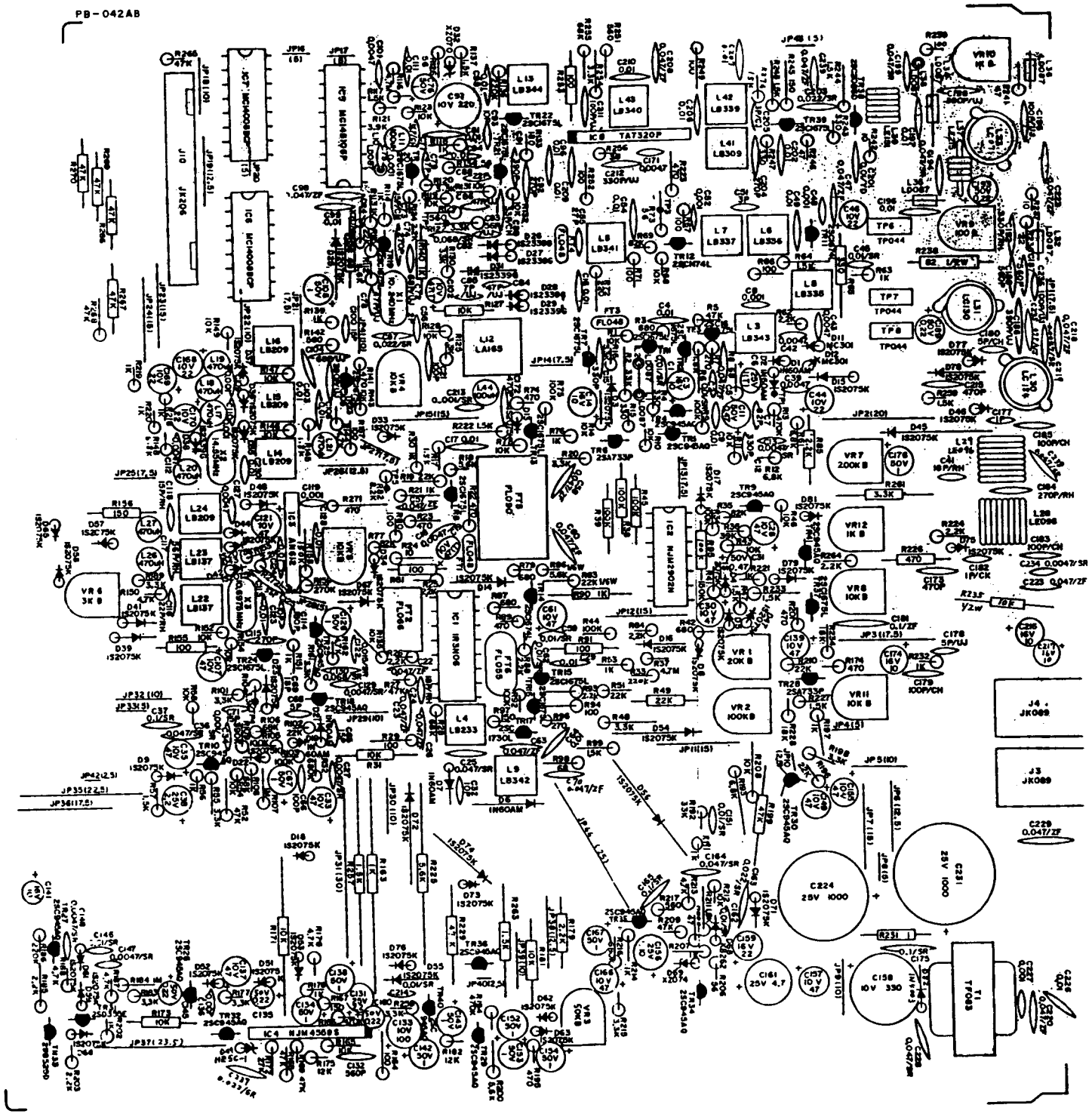

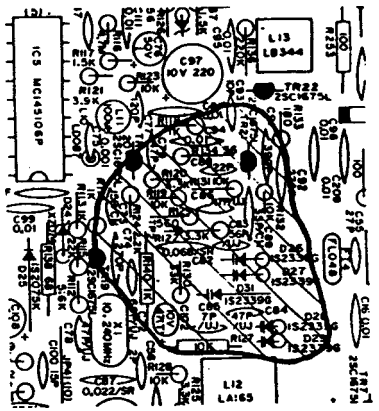

UT-547
MAIN PCB
PARTS ASSEMBLY TOP VIEW
E22-4674

PB-042AB

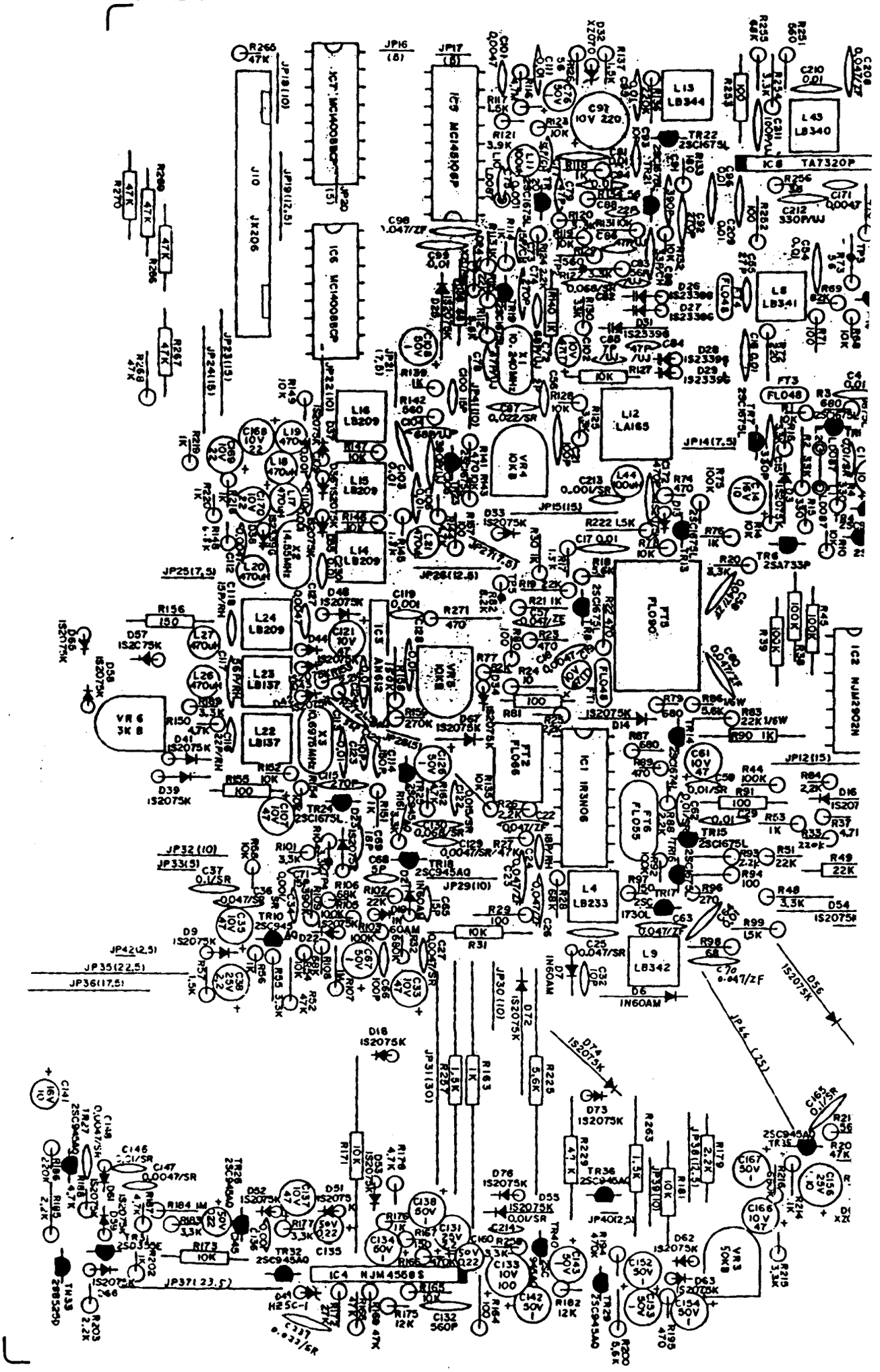

JACKSON

PRESIDENT
ELECTRONICS EUROPE

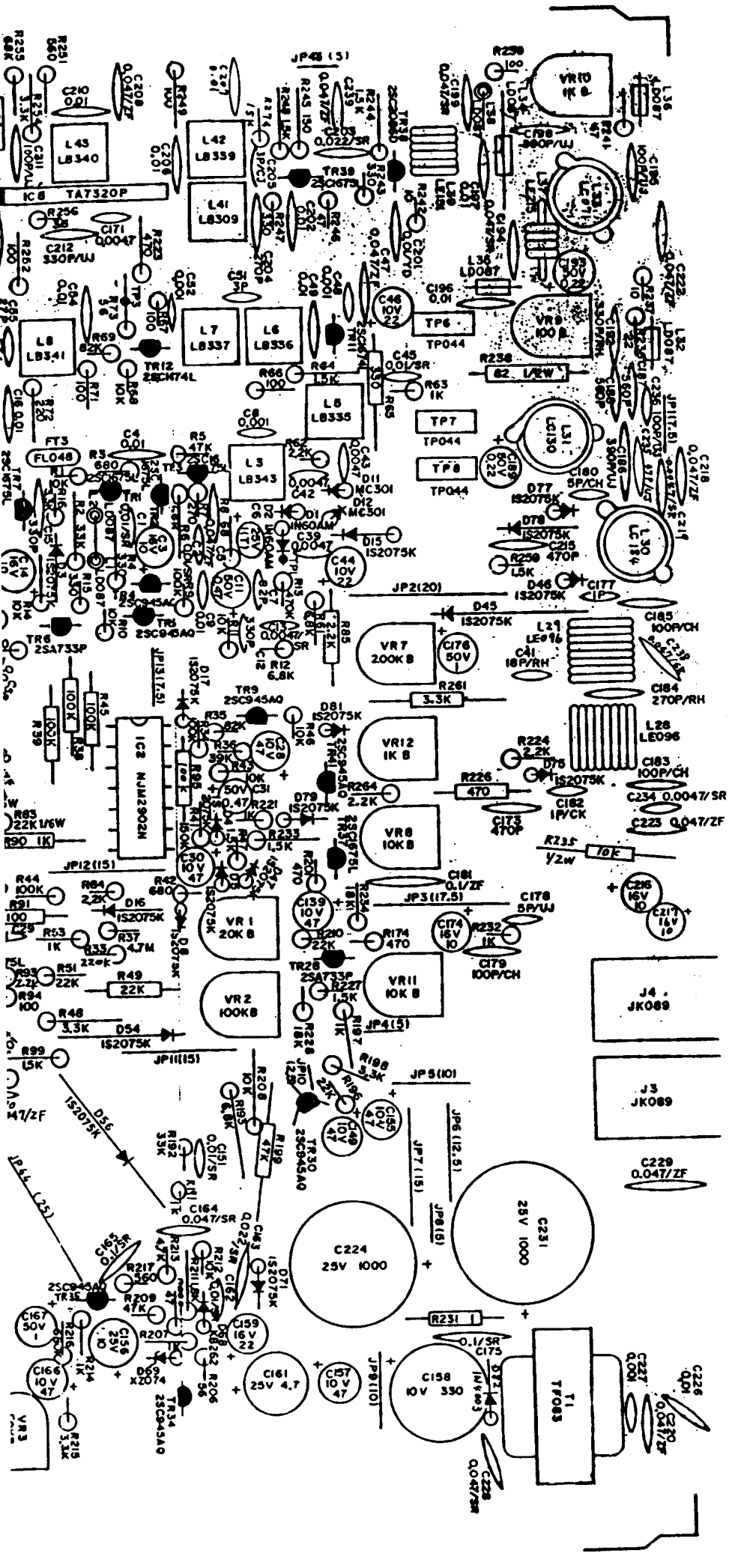
IC8 TA7320P
IC2 NJM2902N
VR1 20K B
VR2 100K B
VR7 200K B
VR8 10K B
VR9 100 B
VR10 1K B
VR11 10K B
VR12 1K B
L43 LB340
L42 LB339
L41 LB309
L8 LB341
L7 LB337
L6 LB336
L5 LB335
L3 LB343
L31 LC130
L30 LC114
L21 LE096
L28 LE096
J4 JK089
J3 JK089
C224 25V 1000
C231 25V 1000
T1 TF083
C158 10V 330
C161 25V 4.7
C157 10V 47
C156 25V 10
C159 16V 22
C166 10V 47
C167 50V
C164 0.047/SR
C165 0.1/SR
C162 0.01/SR
C163 0.022/SR
C151 0.01/SR
C175 0.1/SR
C227 0.001
C226 0.01
C220 0.047/ZF
C229 0.047/ZF
C223 0.047/ZF
C218 0.047/ZF
C214 0.047/ZF
C208 0.047/ZF
C201 0.047/ZF
C198 390P/UJ
C212 330P/UJ
C183 100P/CH
C184 270P/RH
C185 100P/CH
C186 500P/UJ
C180 5P/CH
C182 1P/CK
C178 5P/UJ
C179 100P/CH
C173 470P
C215 470P
C41 18P/RH
C177 1P
C181 0.1/ZF
C234 0.0047/SR
C222 0.047/ZF
C221 0.047/ZF
C219 0.047/ZF
C213 0.047/ZF
C209 0.047/ZF
C207 0.047/ZF
C205 0.047/ZF
C203 0.047/ZF
C199 0.047/ZF
C197 0.047/ZF
C194 0.047/ZF
C191 0.047/ZF
C189 0.047/ZF
C187 0.047/ZF
C45 0.01/SR
C47 0.047/ZF
C43 0.0047
C42 0.0047
C39 0.0047
C37 0.0047
C35 0.0047
C33 0.0047
C31 0.0047
C29 0.0047
C27 0.0047
C25 0.0047
C23 0.0047
C21 0.0047
C19 0.0047
C17 0.0047
C15 0.0047
C13 0.0047
C11 50V 0.22
C9 50V 0.22
C7 50V 0.22
C5 50V 0.22
C3 16V 10
C1 16V 10
C30 10V 47
C28 10V 47
C139 10V 47
C174 16V 10
C216 16V 10
C217 16V 10
C44 10V 22
C46 10V 22
C49 10V 47
C50 10V 47
C53 10V 47
C54 10V 47
C55 10V 47
C56 10V 47
C57 10V 47
C58 10V 47
C59 10V 47
C60 10V 47
C61 10V 47
C62 10V 47
C63 10V 47
C64 10V 47
C65 10V 47
C66 10V 47
C67 10V 47
C68 10V 47
C69 10V 47
C70 10V 47
C71 10V 47
C72 10V 47
C73 10V 47
C74 10V 47
C75 10V 47
C76 10V 47
C77 10V 47
C78 10V 47
C79 10V 47
C80 10V 47
C81 10V 47
C82 10V 47
C83 10V 47
C84 10V 47
C85 10V 47
C86 10V 47
C87 10V 47
C88 10V 47
C89 10V 47
C90 10V 47
C91 10V 47
C92 10V 47
C93 10V 47
C94 10V 47
C95 10V 47
C96 10V 47
C97 10V 220
C98 10V 47
C99 10V 47
C100 10V 47
C101 10V 47
C102 10V 47
C103 10V 47
C104 10V 47
C105 10V 47
C106 10V 47
C107 10V 47
C108 10V 47
C109 10V 47
C110 10V 47

PRESIDENT

JACKSON N

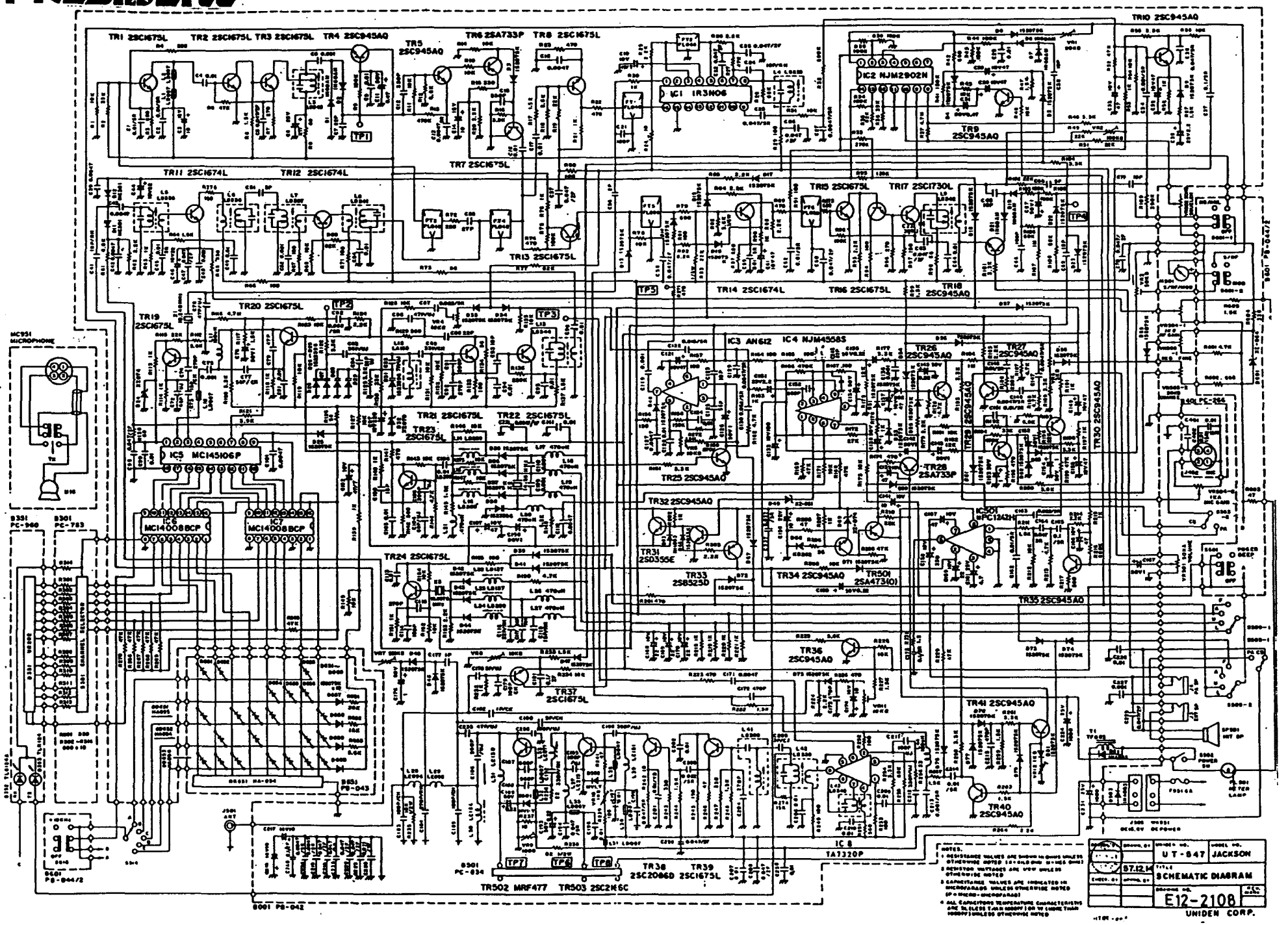

		MODEL NO.	UT-847 JACKSON
	87.12.K	TITLE	SCHEMATIC DIAGRAM
		DRAWING NO.	E12-2108

UNIDEN CORP.

PRESIDENT

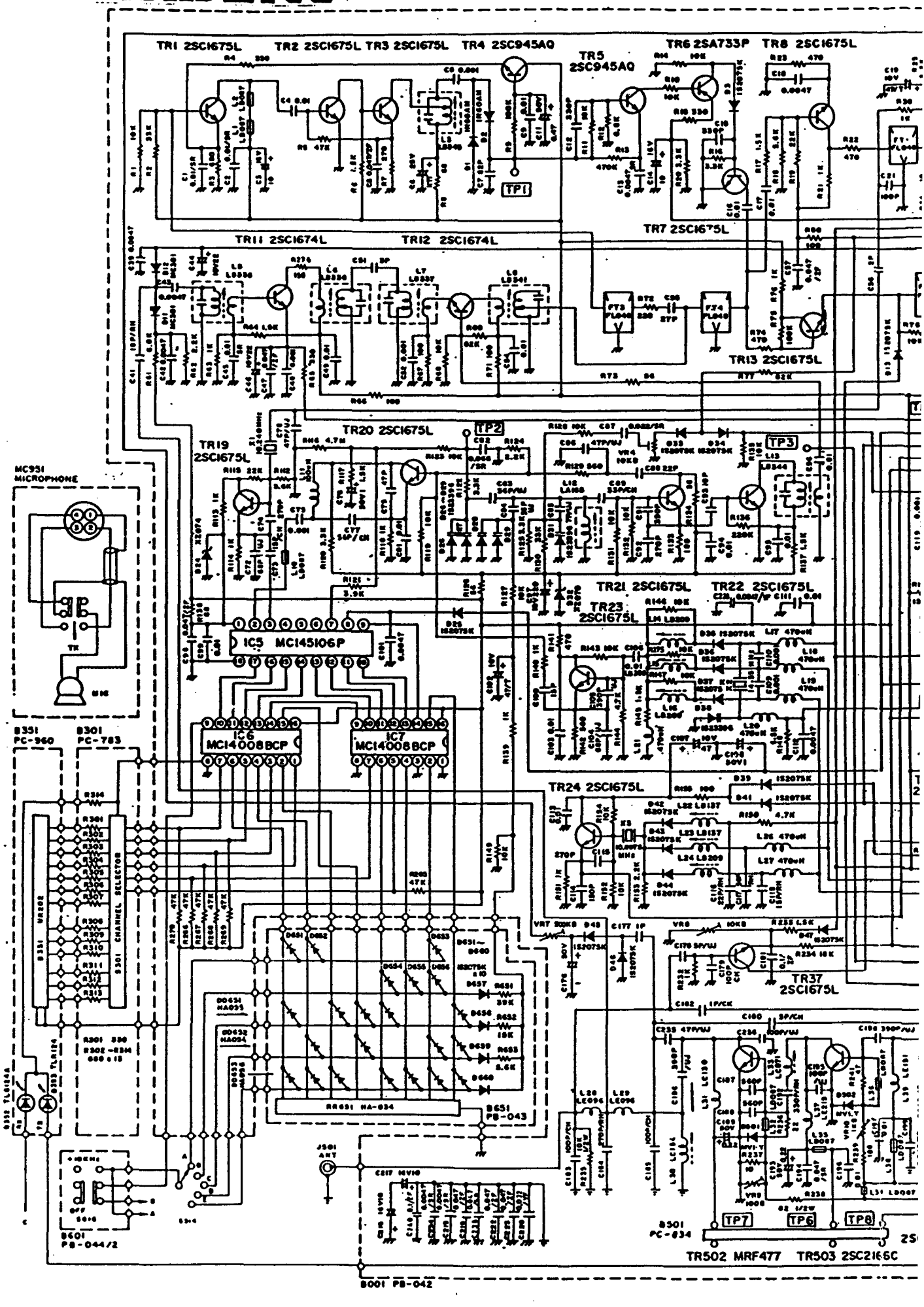
TR1 2SC1675L
TR2 2SC1675L
TR3 2SC1675L
TR4 2SC945AQ
TR5 2SC945AQ
TR6 2SA733P
TR8 2SC1675L
TR7 2SC1675L
TR11 2SC1674L
TR12 2SC1674L
TR13 2SC1675L
TR19 2SC1675L
TR20 2SC1675L
TR21 2SC1675L
TR22 2SC1675L
TR23 2SC1675L
TR24 2SC1675L
TR37 2SC1675L
TP1
TP2
TP3
TP6
TP7
TP8
MC951 MICROPHONE
IC5 MC145106P
IC6 MC14008BCP
IC7 MC14008BCP
B351 PC-960
B301 PC-783
B601 PB-044/2
B651 PB-043
B001 PB-042
B501 PC-834
CHANNEL SELECTOR
TR502 MRF477
TR503 2SC2166C

JACKSON N

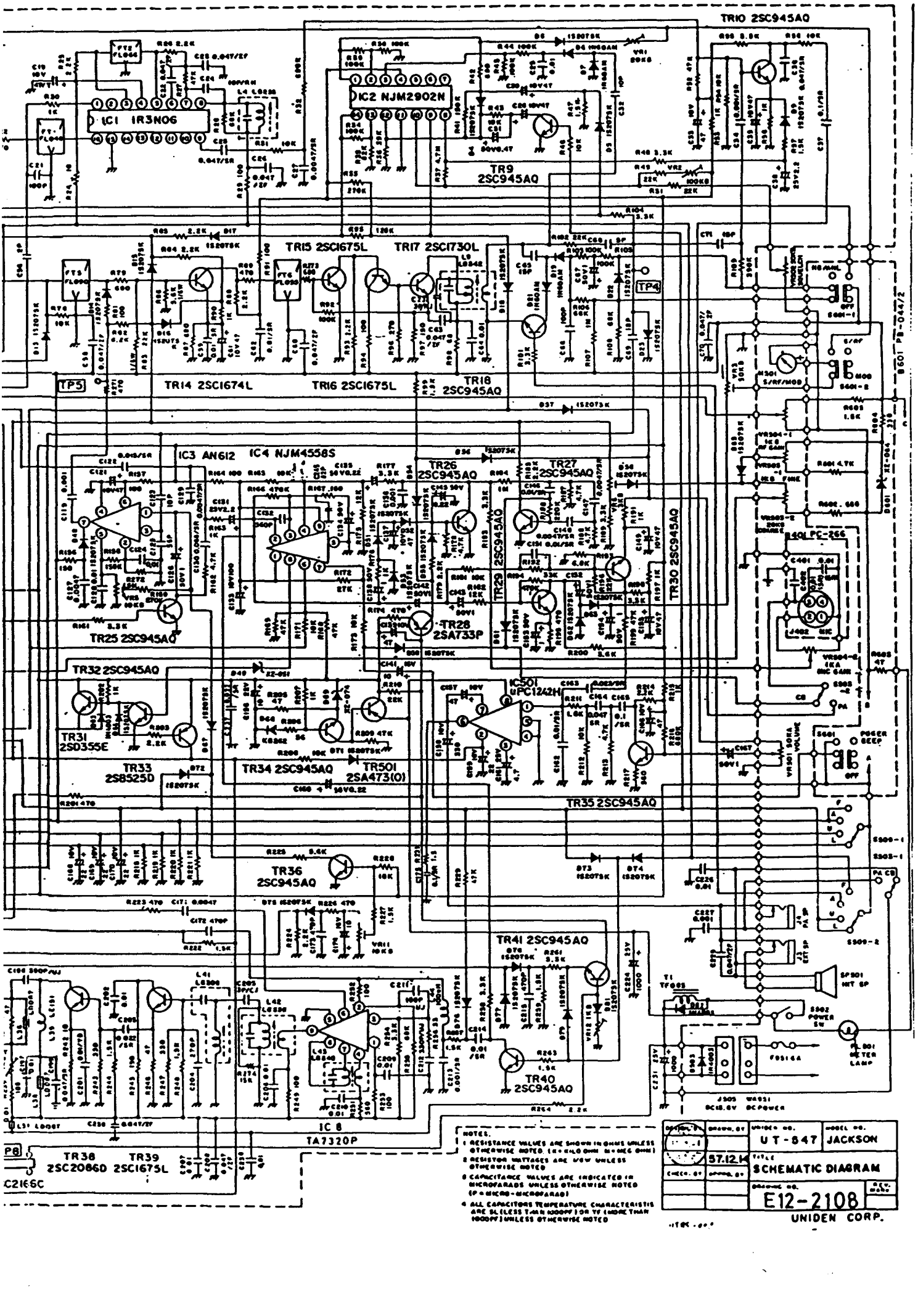

NOTES.
1. RESISTANCE VALUES ARE SHOWN IN OHMS UNLESS OTHERWISE NOTED. (K = KILO OHM M = MEG OHM)
2. RESISTOR WATTAGES ARE 1/6W UNLESS OTHERWISE NOTED
3. CAPACITANCE VALUES ARE INDICATED IN MICROFARADS UNLESS OTHERWISE NOTED (P = MICRO-MICROFARAD)
4. ALL CAPACITORS TEMPERATURE CHARACTERISTIS ARE SL (LESS THAN 1000PF) OR YF (MORE THAN 1000PF) UNLESS OTHERWISE NOTED

DRAWN. BY		UNIDEN NO. UT-547	MODEL NO. JACKSON
	57.12.14	TITLE SCHEMATIC DIAGRAM	
CHECK. BY	APPRO. BY	DRAWING NO. E12-2108	REV. MARK

UNIDEN CORP.

LISTE PIECES DETACHEES JACKSON

CODE	D E S I G N A T I O N	QTE/MOD.
BC003	BOBINE LD-087	8
BC004	BOBINE LE-096	2
BC005	BOBINE LE-151	1
BC008	BOBINE LE-215	1
BC009	SELF LZ-016 100UH	2
BC010	SELF LZ-016 470UH	7
BC011	TRANSFORMATEUR TF-083	1
BC015	BOBINE LC-071	2
BC016	BOBINE LC-130	1
BR003	BOBINE LA-165	1
BR015	BOBINE LB-137	2
BR016	BOBINE LB-209	4
BR022	BOBINE LB-233	1
BR023	BOBINE LB-309	1
BR024	BOBINE LB-335	1
BR025	BOBINE LB-336	1
BR026	BOBINE LB-337	1
BR027	BOBINE LB-339	1
BR028	BOBINE LB-340	1
BR029	BOBINE LB-341	1
BR030	BOBINE LB-342	1
BR031	BOBINE LB-343	1
BR032	BOBINE LB-344	1
DC001	DIODE 1N60 AM	6
DC005	DIODE 1S2075K	63
DC007	DIODE MC-301	2

LISTE PIECES DETACHEES JACKSON

CODE	D E S I G N A T I O N	QTE/MOD.
DC008	DIODE 1N4003	2
DC009	DIODE MV-1Y	2
DC010	DIODE ZENER XZ-051	1
DC011	DIODE ZENER XZ-070	1
DC012	DIODE ZENER XZ-074	2
DC013	DIODE ZENER XZ-064	1
DC014	DIODE HA-034	1
DC015	DIODE HA-054	1
DC016	DIODE HA-055	1
DC017	DIODE HA-056	1
DV002	DIODE 1S2339G	6
DV003	DIODE KB-262	1
HM001	MICROPHONE MK-221	1
HP001	HAUT-PARLEUR SP-053	1
IL001	CICUIT INTEGRE MC14008BCP	2
IP001	CIRCUIT INTEGRE UPC1182H	1
IR001	CIRCUIT INTEGRE AN612	1
IR005	CIRCUIT INTEGRE NJM2902N	1
IR006	CIRCUIT INTEGRE NJM4558S	1
IR007	CIRCUIT INTEGRE TA7320P	1
IR008	CIRCUIT INTEGRE IR3N06	1
IS002	CIRCUIT INTEGRE MC145106P	1
JX001	JACK JK-089	2
JX002	JACK JK-052	1
JX003	JACK JK-068	1
JX004	JACK JK-206	1

LISTE PIECES DETACHEES JACKSON

CODE	D E S I G N A T I O N	QTE/MOD.
JX005	JACK JK-087	1
JX006	JACK JK-075	1
OA001	AFFICHEUR UR-202D	1
OX001	LED TLR-124 RED	1
OX002	DIODE / LED TLG-124A GREEN	1
PF001	FILTRE FL-048 SFE10.7MS2-M	3
PF002	FILTRE FL-066	1
PF004	FILTRE FL-055 10M-7A1	1
PF005	FILTRE FL-090 UMF-058	1
PQ002	QUARTZ 10.6975	1
PQ005	QUARTZ 10.240 QX-074	1
PQ006	QUARTZ 14.550	1
QX002	FACE AVANT JACKSON	1
RV002	POTENTIOMETRE RV-320 50KA	1
RV003	POTENTIOMETRE RV-447 50KB	1
RV004	POTENTIOMETRE RV-485 1KB.1KA	1
RV005	POTENTIOMETRE RV-560 20KB.1KB	1
SS001	COMMUTATEUR SR-208	1
SX001	FUSIBLE FS-014 6A	1
SX002	COMMUTATEUR SR-187	1
SX004	COMMUTATEUR SW-317	1
SX005	COMMUTATEUR SR-342	1
TB001	TRANSISTOR 2SA473-O	1
TH001	TRANSISTOR 2SC2166-C	1
TH003	TRANSISTOR MRF-477	1
TX001	TRANSISTOR 2SA733-P	2

CODE	D E S I G N A T I O N	QTE/MOD.
TX002	TRANSISTOR 2SC945A-Q	16
TX003	TRANSISTOR 2SC1674-L	3
TX004	TRANSISTOR 2SC1675-L	16
TX005	TRANSISTOR 2SC1730-L	1
TX009	TRANSISTOR 2SB525-D	1
TX010	TRANSISTOR 2SC2086-D	1
TX011	TRANSISTOR 2SD355-E	1
VM002	VU-METRE MT-221	1