# 1001002, Washington

## 40-Channel SSB Base

$5.00

# Service manual

PRESIDENT

Engineered to be the very best.

President Electronics, Inc., 16691 Hale Ave.,
Irvine, California 92714 (714) 556-7355

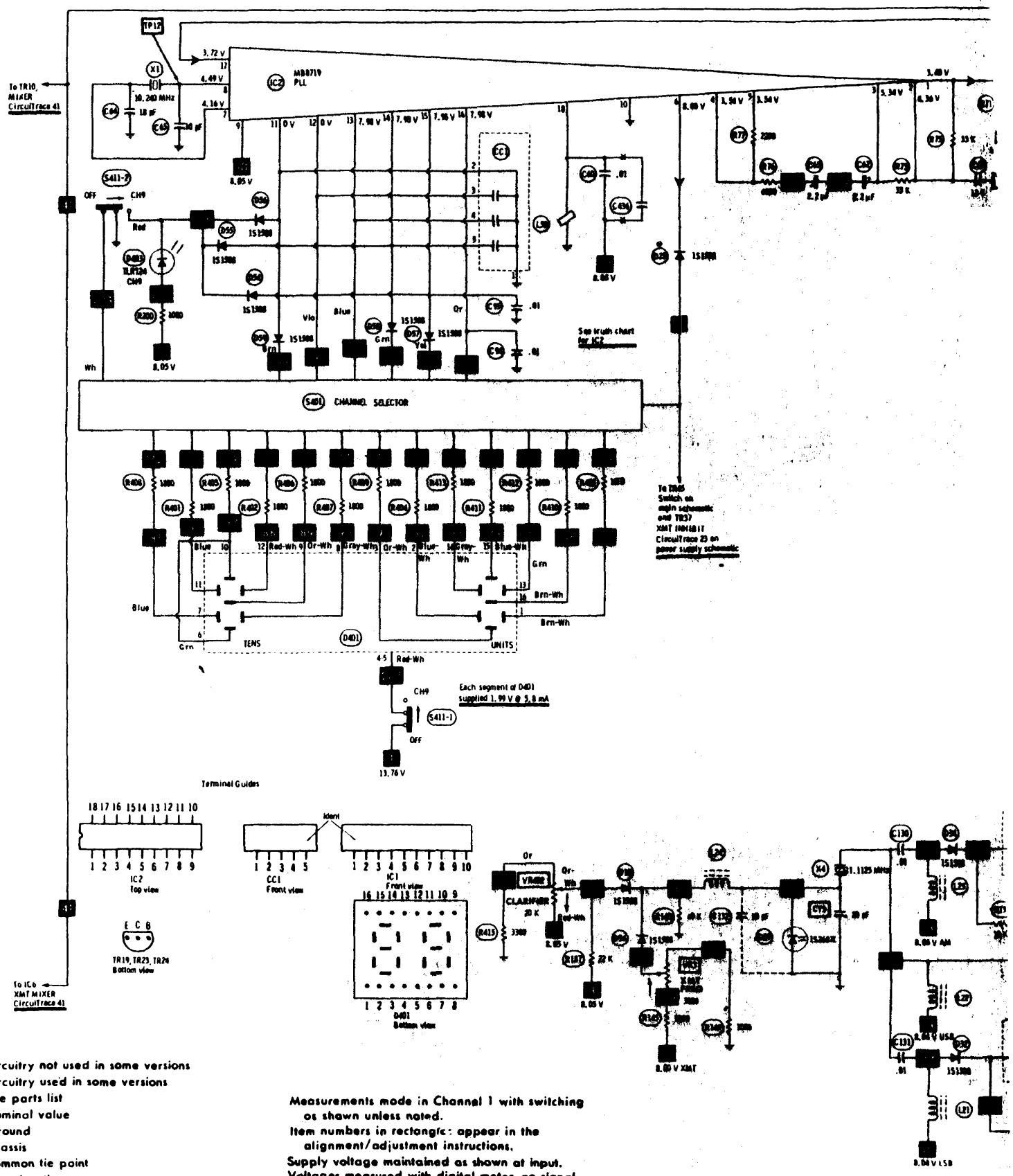


- Circuitry not used in some versions
- Circuitry used in some versions
- See parts list
- Nominal value
- Ground
- Chassis
- Common tie point
- Signal path
- Voltage path

Measurements made in Channel 1 with switching as shown unless noted.
Item numbers in rectangle: appear in the alignment/adjustment instructions.
Supply voltage maintained as shown at input.
Voltages measured with digital meter, no signal.
Controls adjusted for normal operation.
Arrow at control indicates direction of advance.
Terminal identification may not be found on unit.
Resistors are 1/2W or less, 5% unless noted.
Value in ( ) used in some versions.

A PHOTOFACT STANDARD NOTATION SCHEMATIC WITH CIRCUITRACE

© Howard W. Sams & Co., Inc. 1978

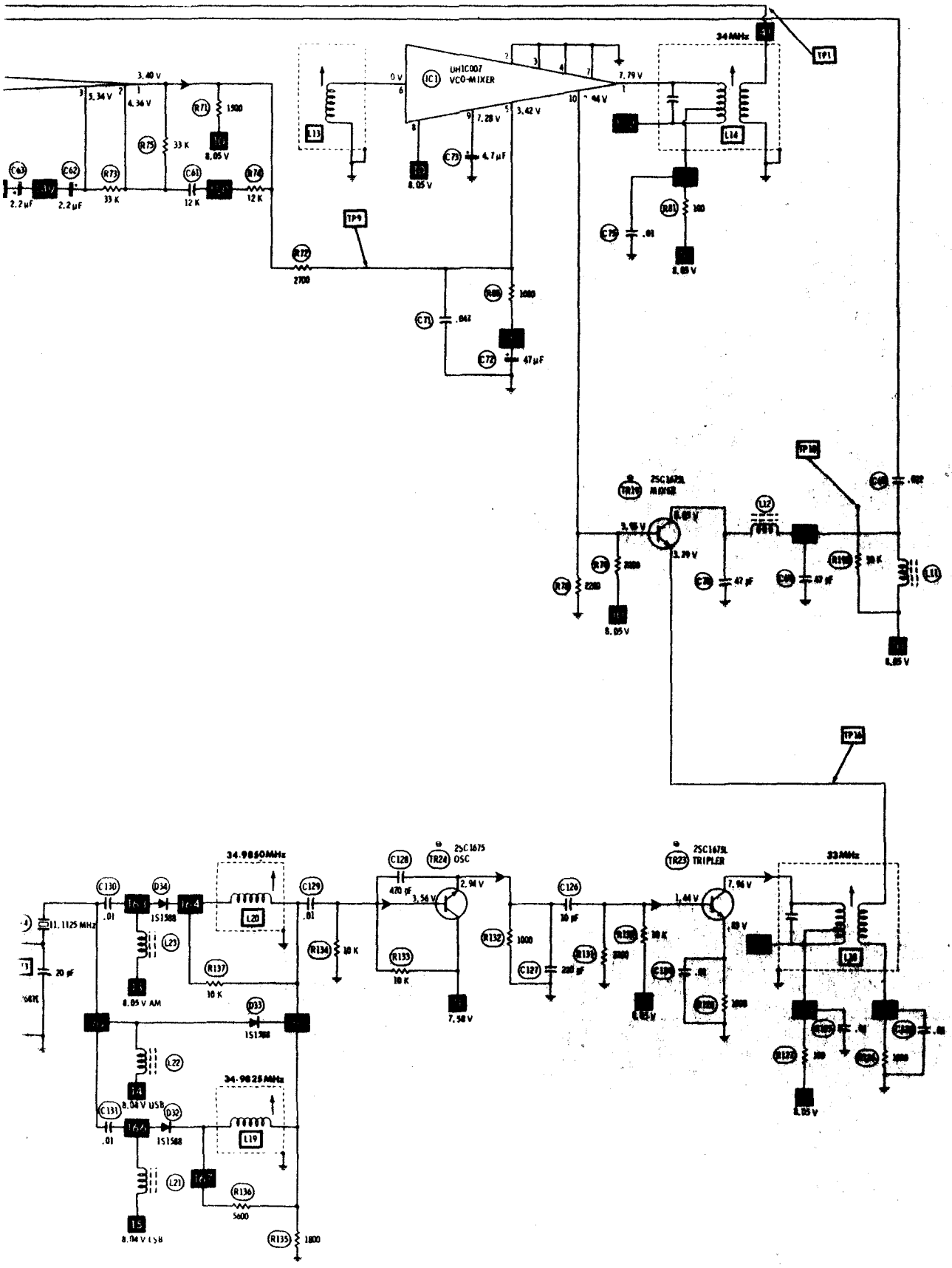


PRESIDENT MODEL 1001002. WASHINGTON

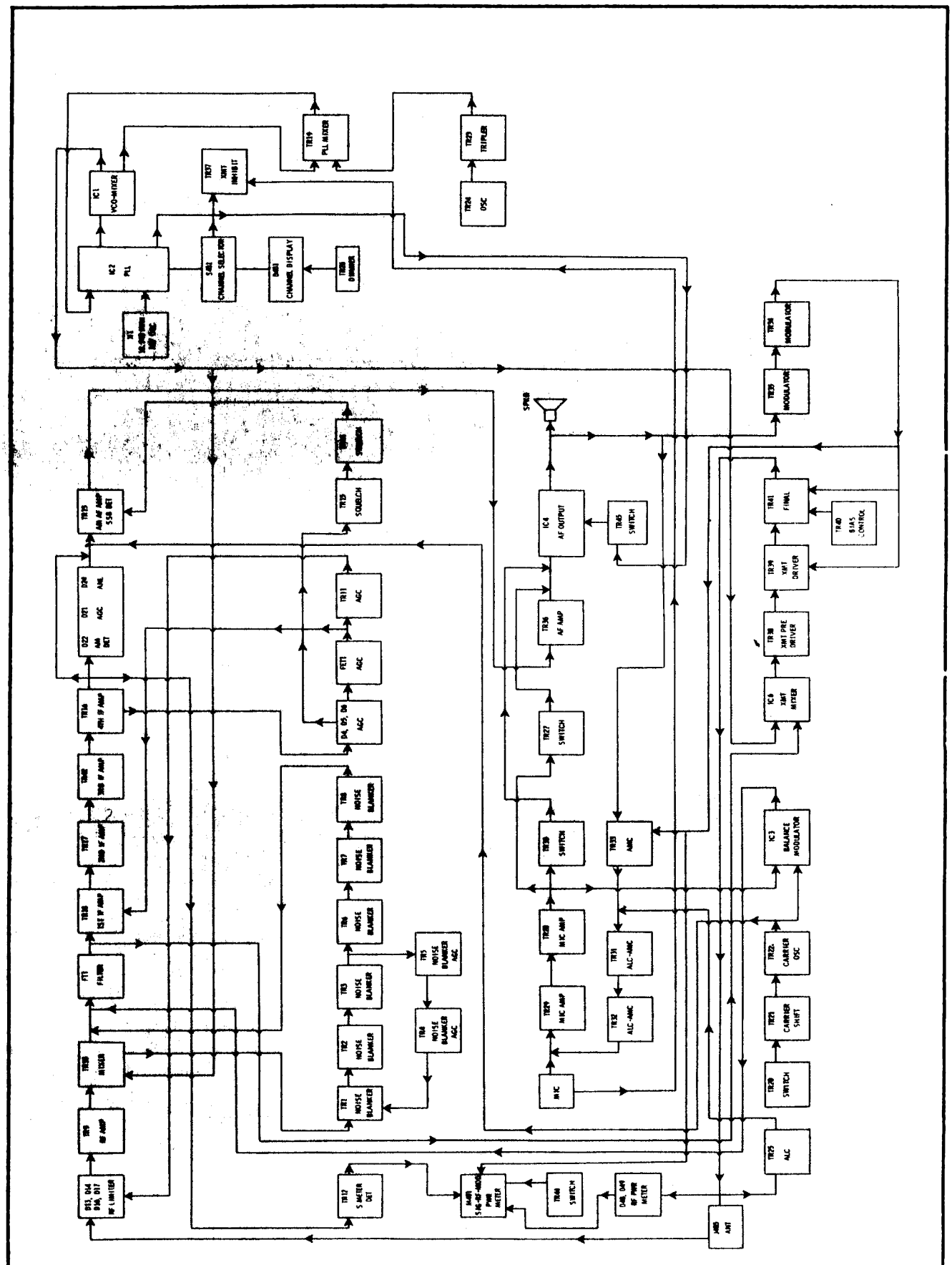

# BLOCK DIAGRAM

## ALIGNMENT INSTRUCTIONS

CAUTION: Use isolation transformer or observe polarity when connecting test equipment.
Maintain line voltage at 120V AC. Allow a 15-minute warm-up period.
Adjustments made with 13.8-volt DC at TP15.
Connect low sides of test equipment to ground unless specified otherwise.
Connect 50-ohm dummy load or antenna before keying transmitter.
Connect microphone.

| Suggested Alignment Tools: | GC ELECTRONICS: |
|---|---|
| L1 thru L10, L13, L14, L17 thru L20, L26 thru L29 ... | 9440 |
| L36, L39 ..... | 8728, 8728A, 9304 |
| CT1, CT2, CT3 ..... | 5000, 8276 |

## SYNTHESIZER ALIGNMENT

| TEST EQUIPMENT | TRANSCEIVER | ADJUST | REMARKS |
|---|---|---|---|
| Input of frequency counter to TP12 (IC2 Pin 8). | Ch. 19, AM | | Check for 10.240MHz. |
| Input of oscilloscope to TP16 (L18 Secondary). | Ch. 19, AM Clarifier Midrange | L18 | Adjust for maximum RF. |
| Input of DC meter to TP9. | Ch. 40, AM | L13 | Adjust for 5.00 volts. |
| Input of oscilloscope to TP1. | Ch. 19, USB | L14 | Adjust for maximum RF. |
| Input of frequency counter to TP1. | Ch. 19, USB Clarifier Midrange | CT3 | Adjust for 34.9875MHz +20Hz. Check all channels. (See Truth Chart for correct frequencies.) |
| Input of frequency counter to TP1. | Ch. 19, LSB Clarifier Midrange | L19 | Adjust for 37.9825MHz +20Hz. Check all channels. (See Truth Chart for correct frequencies.) |
| Input of frequency counter to TP1. | Ch. 19, AM Clarifier Midrange | L20 | Adjust for 34.9850MHz. +20Hz. Check all channels. (See Truth Chart for correct frequencies.) |
| Input of frequency counter to TP1. | Ch. 19, XMT, LSB | VR3 | Adjust for 34.9825MHz +20Hz. |
| Input of frequency counter to TP10. | Ch. 1, USB | | Check for 1.430MHz. Check all channels. (See Truth Chart for correct frequencies.) |
| Input of frequency counter to TP3. | Ch. 19, USB | CT1 | Adjust for 7.8025MHz +5Hz or -0Hz. |
| Input of frequency counter to TP3. | Ch. 19, USB | CT2 | Adjust for 7.7975MHz +0Hz or -5Hz. |
| Input of frequency counter to TP3. Disconnect TP7 and TP8. | Ch. 19, XMT, AM | L17 | Adjust for 7.8000MHz +5Hz. |

## RECEIVER ALIGNMENT

Connect an AC VTVM or AF wattmeter across speaker voice coil.
Adjust volume control to obtain a suitable indication.
Set generator output low enough to prevent AGC limiting.
Mode AM, RF Gain Maximum, Squelch MINIMUM, Clarifier Midrange. NB Off

AM

| TEST EQUIPMENT | TRANSCEIVER | ADJUST | REMARKS |
|---|---|---|---|
| Output of signal generator thru .01uF to TP13 (TR10 Collector). 7.8MHz, 1000Hz @ 30% modulation. | Ch. 19 | L3,L4 | Adjust for maximum output. |
| Output of signal generator thru .01uF to antenna input. 27.185MHz,1000Hz @ 30% modulation. | Ch. 19 | L5,L6,L7, L8,L9,L10 | Adjust for maximum output. If necessary readjust L3 and L4 for maximum. |
| Output of signal generator thru .01uF to antenna input. 27.185MHz,1000Hz @ 30% modulation. Input of oscilloscope to TP14 (TR6 Emitter). | Ch. 19 | L1,L2 | Set generator output for 10db signal to noise plus noise ratio of receiver. Inject a 100pps, 1uSec pulse width signal at antenna input. Switch Noise Blanker on and adjust for maximum amplitude pulses. |

## RECEIVER ADJUSTMENTS

Connect an AC VTVM or AF wattmeter across speaker voice coil.
Adjust volume control to obtain a suitable indication.
Mode AM, RF Gain Maximum, Squelch MINIMUM, Clarifier Midrange, NB Off

| TEST EQUIPMENT | TRANSCEIVER | ADJUST | REMARKS |
|---|---|---|---|
| Output of signal generator thru .01uF to antenna input. 27.185MHz,1000Hz @ 30% modulation. Output 1000uV. | Ch. 19 Squelch Maximum | VR2 | SQUELCH RANGE Adjust so that squelch just breaks. |
| Output of signal generator thru .01uF to antenna input. 27.185MHz,1000Hz @ 30% modulation. Output 100uV. | Ch. 19 S/RF/MOD S/RF | VR1 | SIG METER Adjust for 9 on sig scale of meter. |

## RECEIVER ALIGNMENT

Connect an AC VTVM or AF wattmeter across speaker voice coil.
Adjust volume control to obtain a suitable indication.
Set generator output low enough to prevent AGC limiting.
Mode USB, RF Gain Maximum, Squelch MINIMUM, Clarifier Midrange, NB Off

SSB

| TEST EQUIPMENT | TRANSCEIVER | ADJUST | REMARKS |
|---|---|---|---|
| Output of signal generator thru .01uF to TP13 (TR10 Collector). 7.8025MHz, no modulation. | Ch. 19 | L3,L4 | Adjust for maximum output. |
| Output of signal generator thru .01uF to antenna input. 27.186MHz, no modulation. | Ch. 19 | L5,L6,L7, L8,L9,L10 | Adjust for maximum output. If necessary readjust L3 and L4 for maximum. |

## TRANSMITTER ALIGNMENT

Connect an RF wattmeter and 50-ohm, 25-watt dummy load to antenna connector.

NOTE: Be sure to check transmit frequency and power on all active channels after alignment of transmitter.
See page 4 for channel frequencies.

| TEST EQUIPMENT | TRANSCEIVER | ADJUST | REMARKS |
|---|---|---|---|
| Input of RF wattmeter and 50-ohm, 25 watt dummy load to antenna input. Inject a two tone 50mV signal at Mic input. | Ch. 19, USB<br>Mike Gain Maximum | L26,L27,<br>L28,L29,<br>L36 | Set VR7 to MINIMUM.<br>Adjust for maximum RF output. |
| Input of spectrum analyzer or harmonic meter to antenna input. | Ch. 19, AM<br>Mike Gain MINIMUM | L39 | Adjust for MINIMUM at 54MHz (2nd harmonic). |

## TRANSMITTER ADJUSTMENTS

Connect an RF wattmeter and 50-ohm, 25-watt dummy load to antenna connector.

NOTE: Be sure to check transmit frequency and power on all active channels after adjustment of transmitter.
See page 4 for channel frequencies.

| TEST EQUIPMENT | TRANSCEIVER | ADJUST | REMARKS |
|---|---|---|---|
| Input of DC meter to TP15. | Ch. 19, AM | RT301 | VOLT REGULATOR<br>Adjust for 13.80 volts. |
| Input of oscilloscope or modulation meter to antenna input. | Ch. 19, AM<br>S/RF/MOD MOD | VR12 | MOD METER<br>Adjust so that MOD meter agrees with external modulation meter. |
| Insert a 0-150mA DC current meter at TP8. No modulation. | Ch. 19, USB<br>Mike Gain MINIMUM | VR8 | RF DRIVER BIAS<br>Adjust for 35mA idle current. Reconnect TP8. |
| Insert a 0-150mA DC current meter at TP7. No modulation. | Ch. 19, USB<br>Mike Gain MINIMUM | VR9 | RF FINAL BIAS<br>Adjust for 45mA idle current. Reconnect TP7. |
| Input of RF wattmeter and 50-ohm, 25 watt dummy load to antenna input. No modulation. | Ch. 19, USB<br>Mike Gain MINIMUM | VR5 | CARRIER BALANCE<br>Adjust for MINIMUM RP output. Check LSB and readjust if necessary for MINIMUM RF output. |
| Input of RF wattmeter and 50-ohm, 25 watt dummy load to antenna input. Inject a two tone, 50mV signal at Mic input. | Ch. 19, USB<br>Mike Gain Maximum | VR7 | RF ALC<br>Adjust for 11.0 watts PEP RF output maximum. |
| Input of RF wattmeter and 50-ohm, 25 watt dummy load to antenna input. No modulation. | Ch. 19, AM<br>Mike Gain MINIMUM | VR6 | AM POWER<br>Adjust for 4.0 watts RF output maximum. |
| Input of RF wattmeter and 50-ohm, 25 watt dummy load to antenna input. No modulation. | Ch. 19, AM<br>Mike Gain MINIMUM<br>S/RF/MOD S/RF | VR10 | RF PWR METER<br>Adjust so that PWR meter agrees with RF wattmeter. |

## TRUTH CHART

| CHANNEL | 1 = 7.98 Volts 0 = 0 Volts<br>IC2 PROGRAM DIVIDER<br>PINS | | | | | | | | DIVIDER INPUT IN MHz AT TP10 | AM REC VCO OUTPUT IN MHz AT TP1 | USB REC VCO OUTPUT IN MHz AT TP1 | LSB REC VCO OUTPUT IN MHz AT TP1 |
|---|---|---|---|---|---|---|---|---|---|---|---|---|
| | 11 | 12 | 13 | 14 | 15 | 16 | | | | | | |
| 1 | 0 | 0 | 1 | 1 | 1 | 1 | | | 1.430 | 34.765 | 34.7675 | 34.7625 |
| 2 | 0 | 1 | 0 | 0 | 0 | 0 | | | 1.440 | 34.775 | 34.7775 | 34.7725 |
| 3 | 0 | 1 | 0 | 0 | 0 | 1 | | | 1.450 | 34.785 | 34.7875 | 34.7825 |
| 4 | 0 | 1 | 0 | 0 | 1 | 1 | | | 1.470 | 34.805 | 34.8075 | 34.8025 |
| 5 | 0 | 1 | 0 | 1 | 0 | 0 | | | 1.480 | 34.815 | 34.8175 | 34.8125 |
| 6 | 0 | 1 | 0 | 1 | 0 | 1 | | | 1.490 | 34.825 | 34.8275 | 34.8225 |
| 7 | 0 | 1 | 0 | 1 | 1 | 0 | | | 1.500 | 34.835 | 34.8375 | 34.8325 |
| 8 | 0 | 1 | 1 | 0 | 0 | 0 | | | 1.520 | 34.855 | 34.8575 | 34.8525 |
| 9 | 0 | 1 | 1 | 0 | 0 | 1 | | | 1.530 | 34.865 | 34.8675 | 34.8625 |
| 10 | 0 | 1 | 1 | 0 | 1 | 0 | | | 1.540 | 34.875 | 34.8775 | 34.8725 |
| 11 | 0 | 1 | 1 | 0 | 1 | 1 | | | 1.550 | 34.885 | 34.8875 | 34.8825 |
| 12 | 0 | 1 | 1 | 1 | 0 | 1 | | | 1.570 | 34.905 | 34.9075 | 34.9025 |
| 13 | 0 | 1 | 1 | 1 | 1 | 0 | | | 1.580 | 34.915 | 34.9175 | 34.9125 |
| 14 | 0 | 1 | 1 | 1 | 1 | 1 | | | 1.590 | 34.925 | 34.9275 | 34.9225 |
| 15 | 1 | 0 | 0 | 0 | 0 | 0 | | | 1.600 | 34.935 | 34.9375 | 34.9325 |
| 16 | 1 | 0 | 0 | 0 | 1 | 0 | | | 1.620 | 34.955 | 34.9575 | 34.9525 |
| 17 | 1 | 0 | 0 | 0 | 1 | 1 | | | 1.630 | 34.965 | 34.9675 | 34.9625 |
| 18 | 1 | 0 | 0 | 1 | 0 | 0 | | | 1.640 | 34.975 | 34.9775 | 34.9725 |
| 19 | 1 | 0 | 0 | 1 | 0 | 1 | | | 1.650 | 34.985 | 34.9875 | 34.9825 |
| 20 | 1 | 0 | 0 | 1 | 1 | 1 | | | 1.670 | 34.005 | 35.0075 | 35.0025 |
| 21 | 1 | 0 | 1 | 0 | 0 | 0 | | | 1.680 | 35.015 | 35.0175 | 35.0125 |
| 22 | 1 | 0 | 1 | 0 | 0 | 1 | | | 1.690 | 35.025 | 35.0275 | 35.0225 |
| 23 | 1 | 0 | 1 | 1 | 0 | 0 | | | 1.720 | 35.055 | 35.0575 | 35.0525 |
| 24 | 1 | 0 | 1 | 0 | 1 | 0 | | | 1.700 | 35.035 | 35.0375 | 35.0325 |
| 25 | 1 | 0 | 1 | 0 | 1 | 1 | | | 1.710 | 35.045 | 35.0475 | 35.0425 |
| 26 | 1 | 0 | 1 | 1 | 0 | 1 | | | 1.730 | 35.065 | 35.0675 | 35.0625 |
| 27 | 1 | 0 | 1 | 1 | 1 | 0 | | | 1.740 | 35.075 | 35.0775 | 35.0725 |
| 28 | 1 | 0 | 1 | 1 | 1 | 1 | | | 1.750 | 35.085 | 35.0875 | 35.0825 |
| 29 | 1 | 1 | 0 | 0 | 0 | 0 | | | 1.760 | 35.095 | 35.0975 | 35.0925 |
| 30 | 1 | 1 | 0 | 0 | 0 | 1 | | | 1.770 | 35.105 | 35.1075 | 35.1025 |
| 31 | 1 | 1 | 0 | 0 | 1 | 0 | | | 1.780 | 35.115 | 35.1175 | 35.1125 |
| 32 | 1 | 1 | 0 | 0 | 1 | 1 | | | 1.790 | 35.125 | 35.1275 | 35.1225 |
| 33 | 1 | 1 | 0 | 1 | 0 | 0 | | | 1.800 | 35.135 | 35.1375 | 35.1325 |
| 34 | 1 | 1 | 0 | 1 | 0 | 1 | | | 1.810 | 35.145 | 35.1475 | 35.1425 |
| 35 | 1 | 1 | 0 | 1 | 1 | 0 | | | 1.820 | 35.155 | 35.1575 | 35.1525 |
| 36 | 1 | 1 | 0 | 1 | 1 | 1 | | | 1.830 | 35.165 | 35.1675 | 35.1625 |
| 37 | 1 | 1 | 1 | 0 | 0 | 0 | | | 1.840 | 35.175 | 35.1775 | 35.1725 |
| 38 | 1 | 1 | 1 | 0 | 0 | 1 | | | 1.850 | 35.185 | 35.1875 | 35.1825 |
| 39 | 1 | 1 | 1 | 0 | 1 | 0 | | | 1.860 | 35.195 | 35.1975 | 35.1925 |
| 40 | 1 | 1 | 1 | 0 | 1 | 1 | | | 1.870 | 35.205 | 35.2075 | 35.2025 |

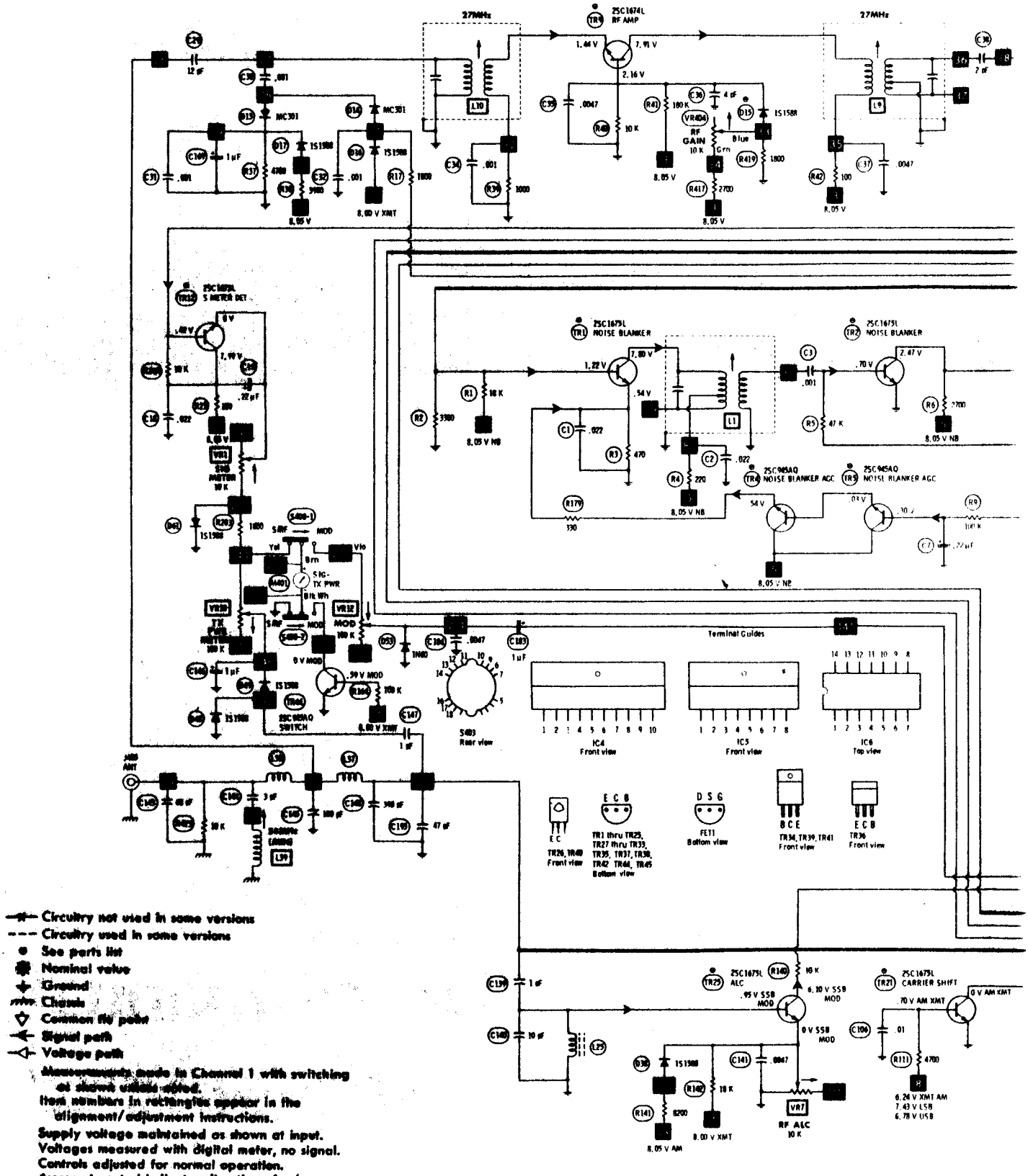


Circuitry not used in some versions
Circuitry used in some versions
See parts list
Nominal value
Ground
Chassis
Common file point
Signal path
Voltage path

Measurements made in Channel 1 with switching as shown unless noted.
Item numbers in rectangles appear in the alignment/adjustment instructions.
Supply voltage maintained as shown at input.
Voltages measured with digital meter, no signal.
Controls adjusted for normal operation.
Arrow at control indicates direction of advance.
Terminal identification may not be found on unit.
Resistors are 1/2W or less, 5% unless noted.
Value in ( ) used in some versions.

A PHOTOPACT STANDARD NOTATION SCHEMATIC
WITH CIRCUITRACE

© Howard W. Sams & Co., Inc. 1978

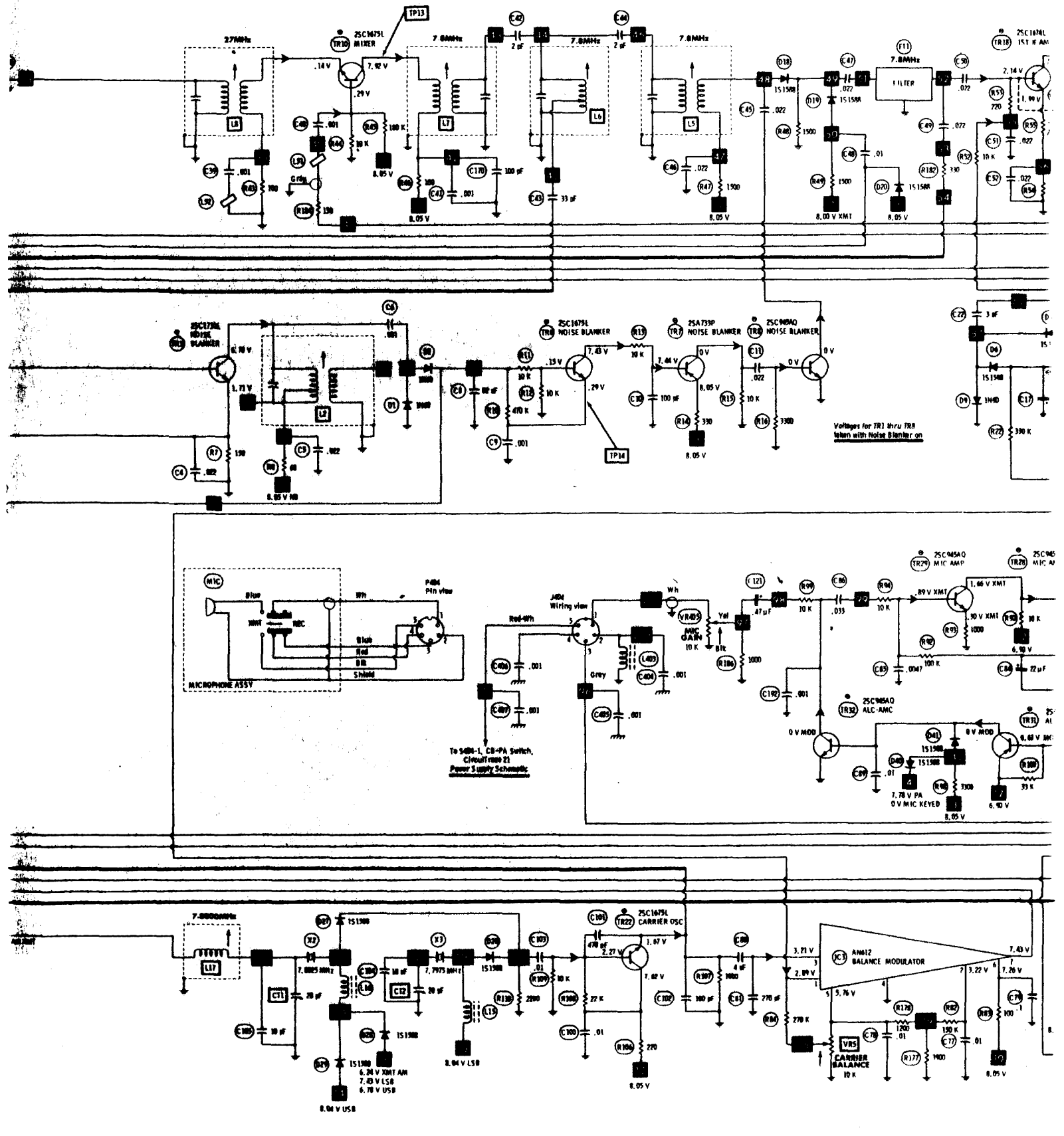

27MHz
2SC1675L MIXER
7.8MHz
FILTER
2SC1674L 1ST IF AMP
2SC1675L NOISE BLANKER
2SA733P NOISE BLANKER
2SC945AQ NOISE BLANKER
Voltages for TR1 thru TR8 taken with Noise Blanker on
MICROPHONE ASSY
P404 Pin view
J404 Wiring view
To S404-1, CB-PA Switch, CircuitTrace 21 Power Supply Schematic
MIC GAIN 10 K
2SC945AQ MIC AMP
2SC945AQ ALC-AMC
7.78 V PA
0 V MIC KEYED
2SC1675L CARRIER OSC
AN612 BALANCE MODULATOR
CARRIER BALANCE 10 K
6.24 V XMT AM
7.43 V LSB
6.78 V USB
8.04 V USB
8.04 V LSB
8.05 V

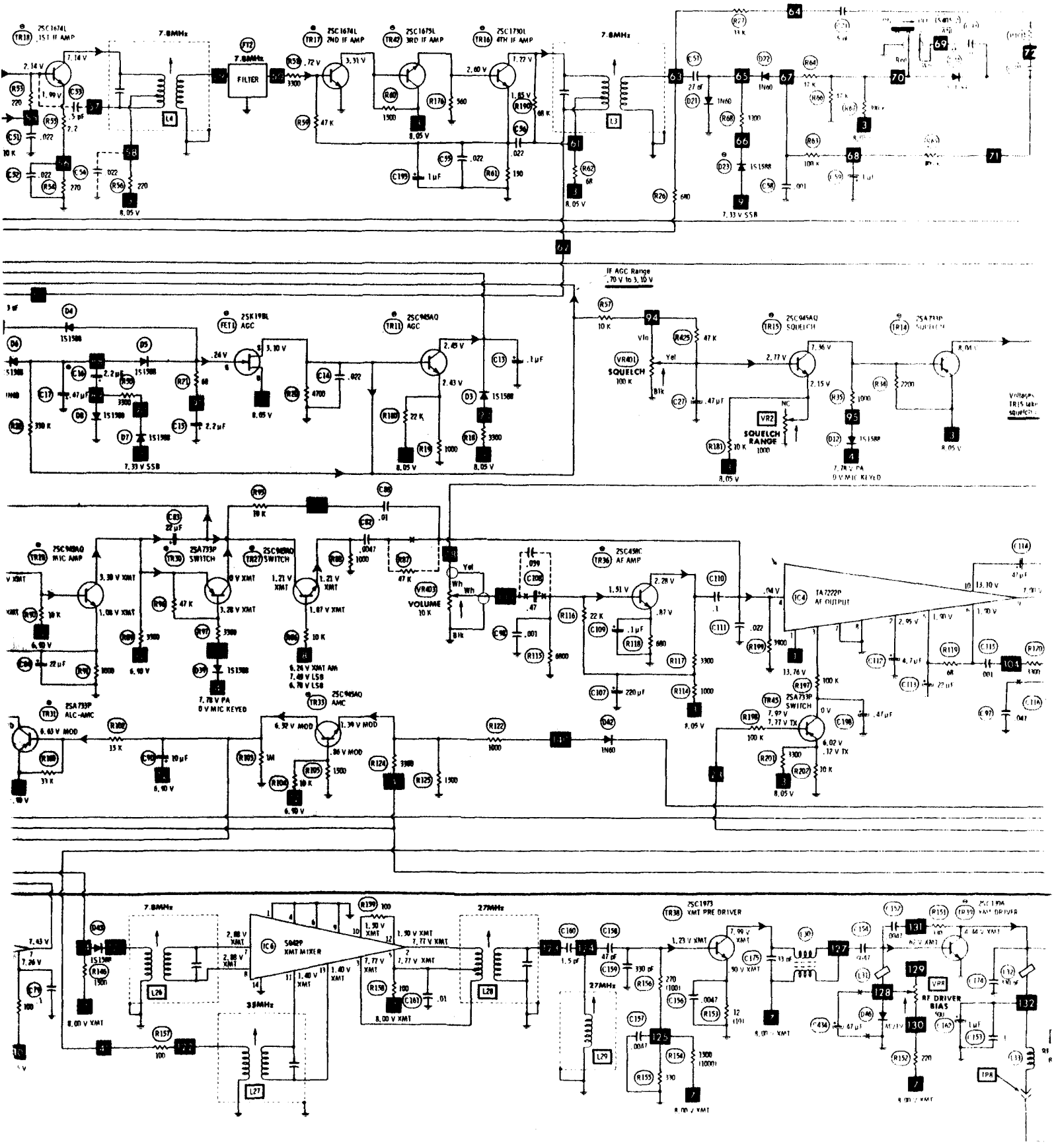

2SC1674L 1ST IF AMP
7.8MHz
FILTER
2SC1674L 2ND IF AMP
2SC1675L 3RD IF AMP
2SC1730L 4TH IF AMP
7.8MHz
IF AGC Range .70 V to 3.10 V
2SK19BL AGC
2SC945AQ AGC
2SC945AQ SQUELCH
SQUELCH
SQUELCH RANGE
2SA733P SQUELCH
Voltages TR15 take squelch
2SC945AQ MIC AMP
2SA733P SWITCH
2SC945AQ SWITCH
VOLUME
2SC458C AF AMP
TA7222P AF OUTPUT
2SA733P ALC-AMC
2SC945AQ AMC
2SA733P SWITCH
7.8MHz
S042P XMT MIXER
35MHz
27MHz
2SC1973 XMT PRE DRIVER
RF DRIVER BIAS

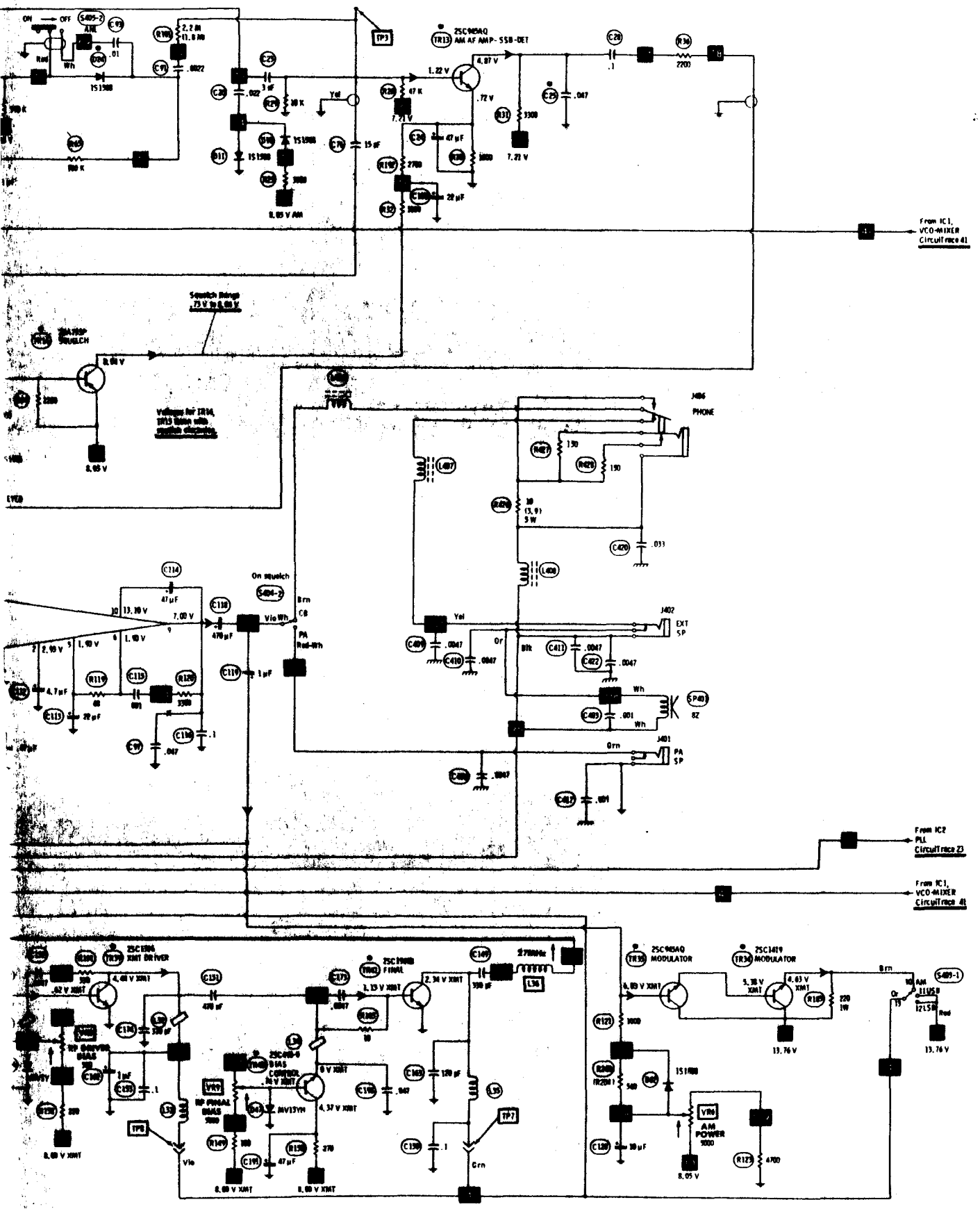


**PRESIDENT MODEL 1001002, WASHINGTON**

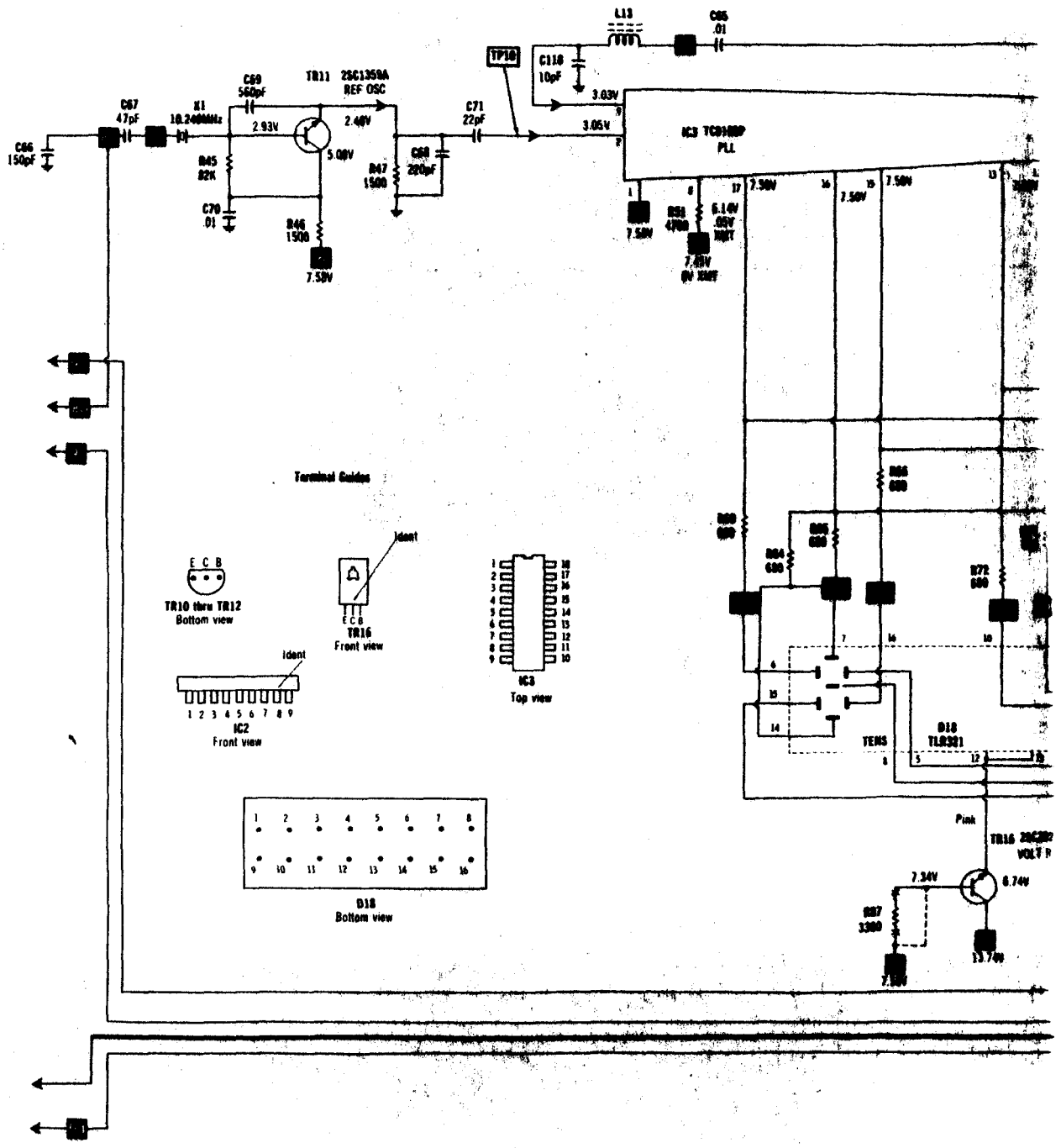


Circuitry not used in some versions
Circuitry used in some versions
See parts list
Nominal value
Ground
Chassis
Common tie point
Signal path
Voltage path

Measurements made in Channel 1 with switching as shown unless noted.
Item numbers in rectangles appear in the alignment/adjustment instructions.
Supply voltage maintained as shown at input.
Voltages measured with digital meter, no signal.
Controls adjusted for normal operation.
Arrow at control indicates direction of advance.
Terminal identification may not be found on unit.
Resistors are 1/2W or less, 5% unless noted.
Value in ( ) used in some versions.

A PHOTOFACT STANDARD NOTATION SCHEMATIC
WITH CIRCUITRACE
Howard W. Sams & Co., Inc. 1978

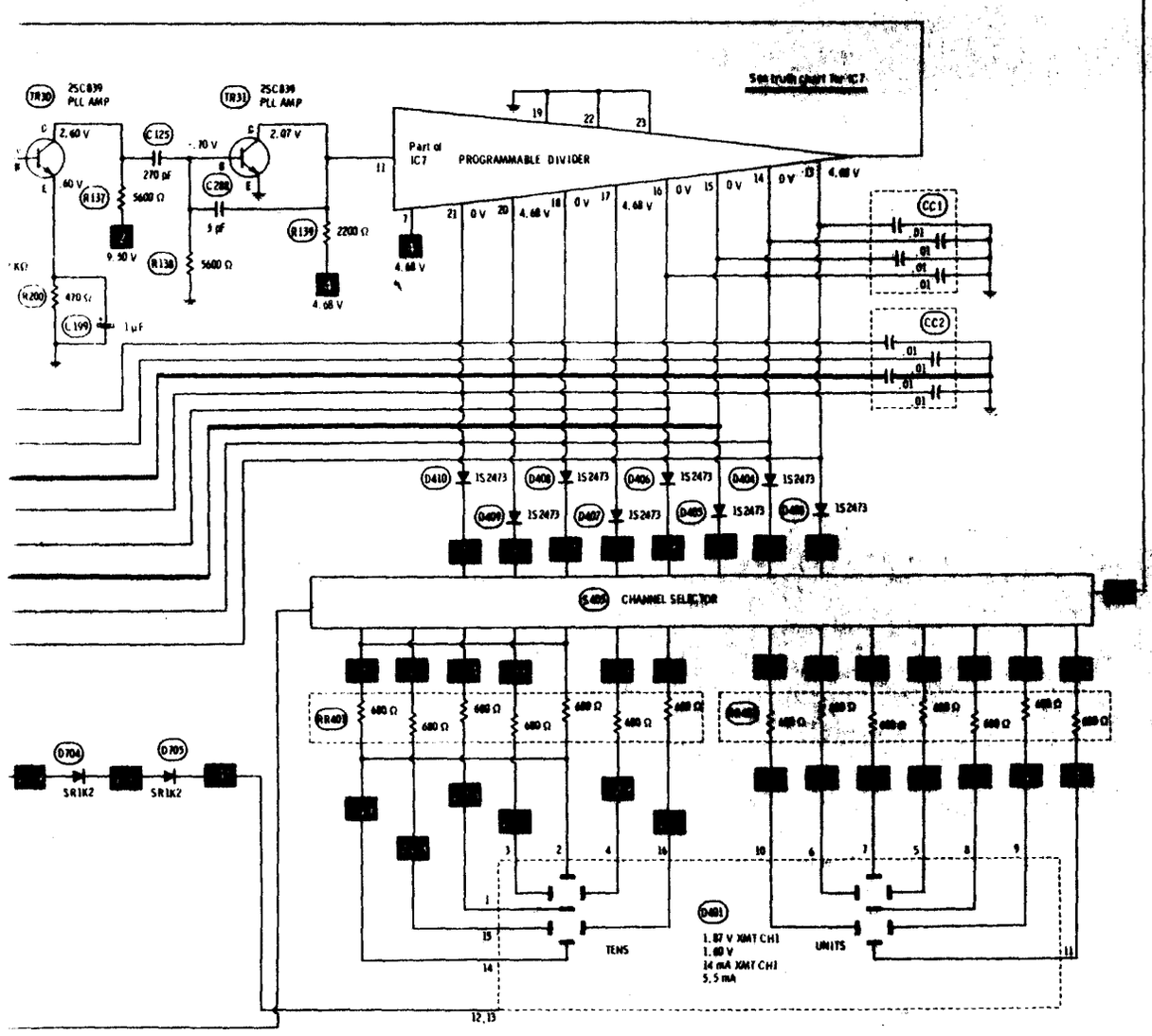
TR30 2SC839 PLL AMP
TR31 2SC839 PLL AMP
2.60 V
2.07 V
.60 V
.70 V
C125 270 pF
R137 5600 Ω
C288 5 pF
R138 5600 Ω
R139 2200 Ω
9.50 V
4.68 V
4.68 V
R200 470 Ω
C199 1 μF
Part of IC7 PROGRAMMABLE DIVIDER
Set truth chart for IC7
4.68 V
0 V
4.68 V
0 V
4.68 V
0 V
0 V
0 V
CC1
CC2
.01
D410 1S2473
D408 1S2473
D406 1S2473
D404 1S2473
D409 1S2473
D407 1S2473
D405 1S2473
D403 1S2473
S400 CHANNEL SELECTOR
RR401 680 Ω
RR402 680 Ω
D704 SR1K2
D705 SR1K2
TENS
UNITS
D401
1.87 V XMT CH1
1.60 V
14 mA XMT CH1
5.5 mA
12,13
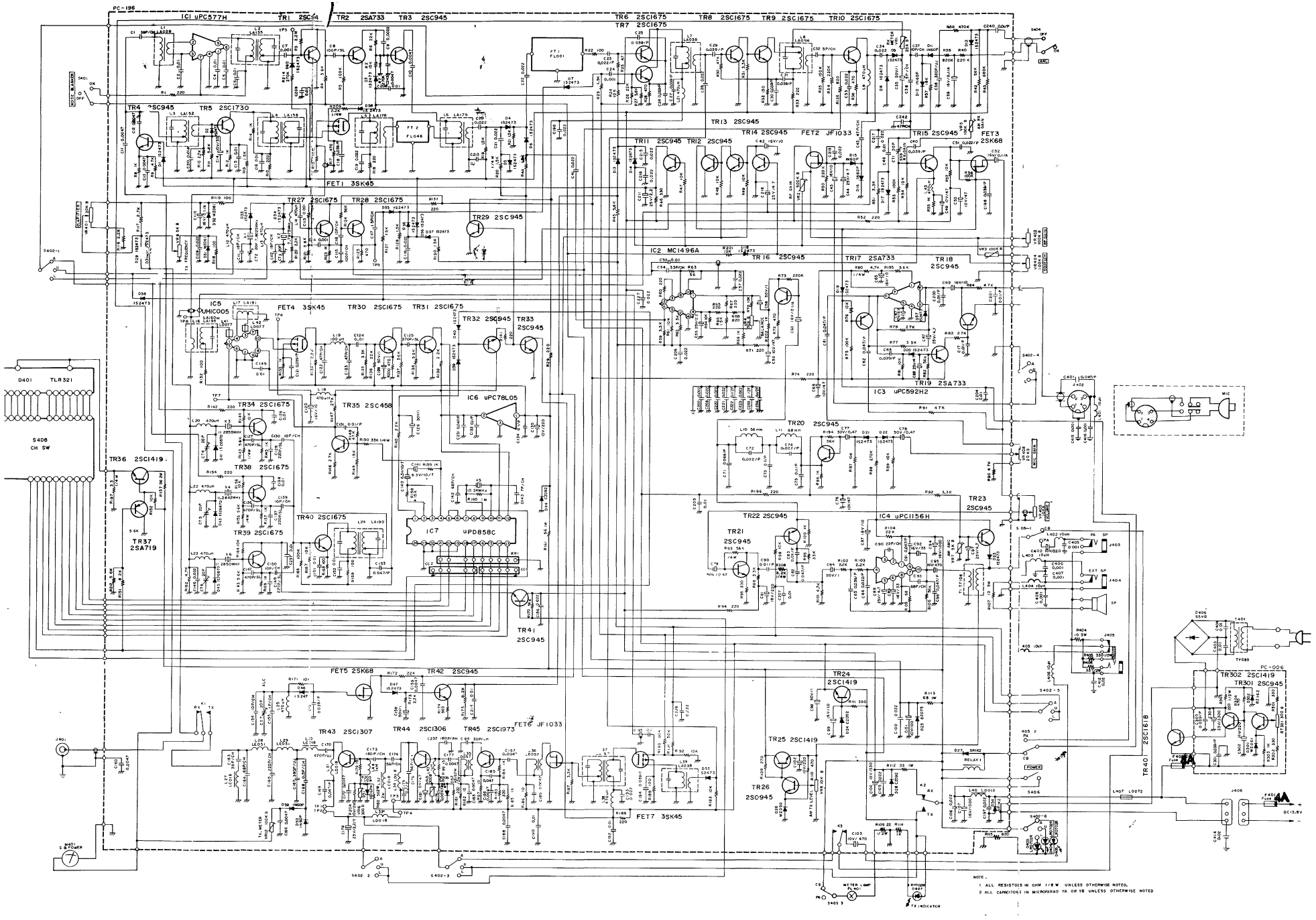
# CIRCUIT DIAGRAM FOR WASHINGTON