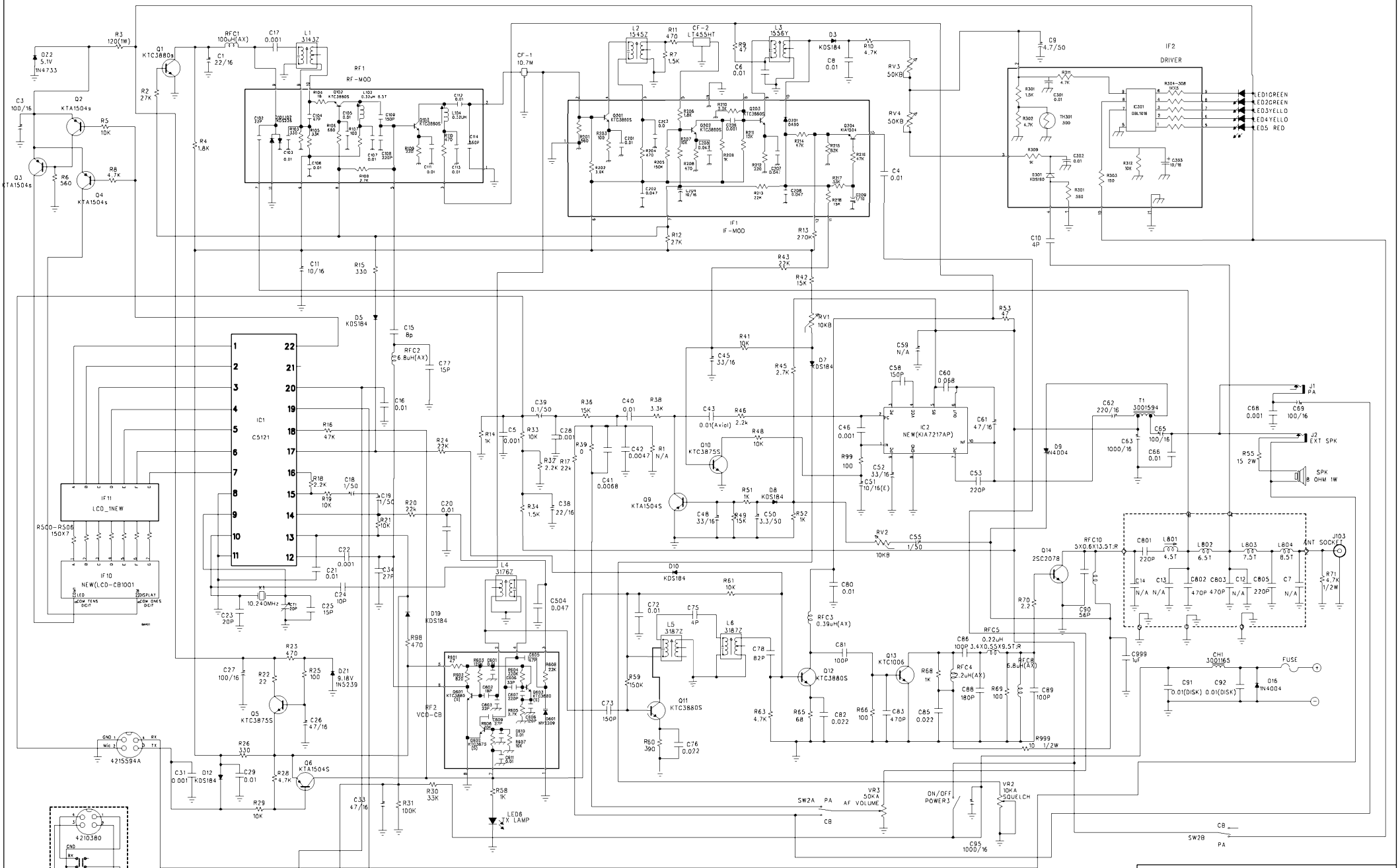
RF1
RF-MOD
IF1
IF-MOD
IF2
DRIVER
IC1
C5121
IC2
NEW(KIA7217AP)
IF11
LCD_1NEW
IF10
NEW(LCD-CB1001)
RF2
VCO-CB
LED1GREEN
LED2GREEN
LED3YELLO
LED4YELLO
LED5 RED
J1
PA
J2
EXT SPK
SPK
8 OHM 1W
J103
ANT SOCKET
FUSE
4215594A
4210380
SW5
PUSH SW
MIC
LED6
TX LAMP
VR3
50KA
AF VOLUME
VR2
10KA
SQUELCH
ON/OFF
POWER3
SW1
SW2A
SW2B
SW3
YPS210120SK
UP
DOWN
MAXON SYSTEM(THAILAND)
Title
TRANSCEIVER SCHEMATIC DIAGRAM
Size
A3
MODEL NAME : 1001Z
MODEL CODE : # 3355
REV
C
Date : Sep 29,2003
Sheet 1 of 1