WQFN32 5x5, 0.5P
CASE 510BV
ISSUE O

DATE 31 AUG 2016

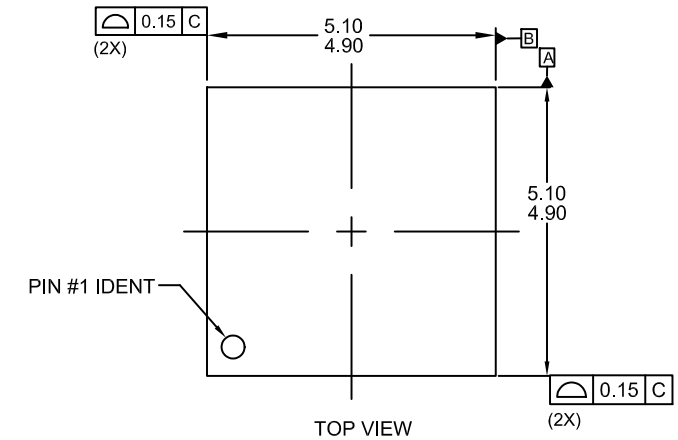

TOP VIEW

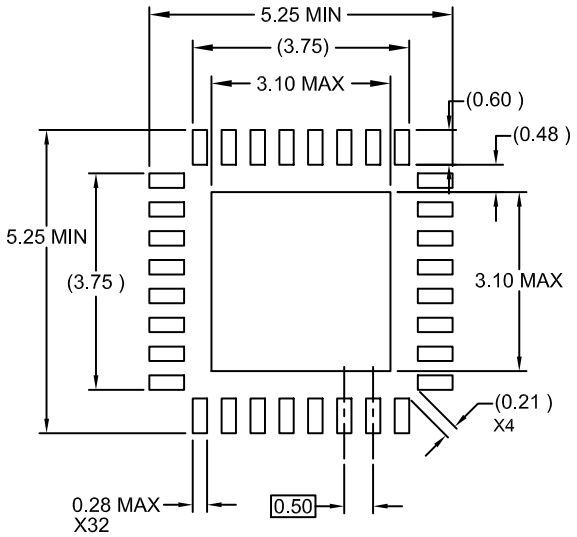

RECOMMENDED LAND PATTERN

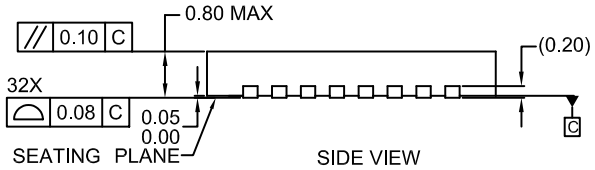

SIDE VIEW

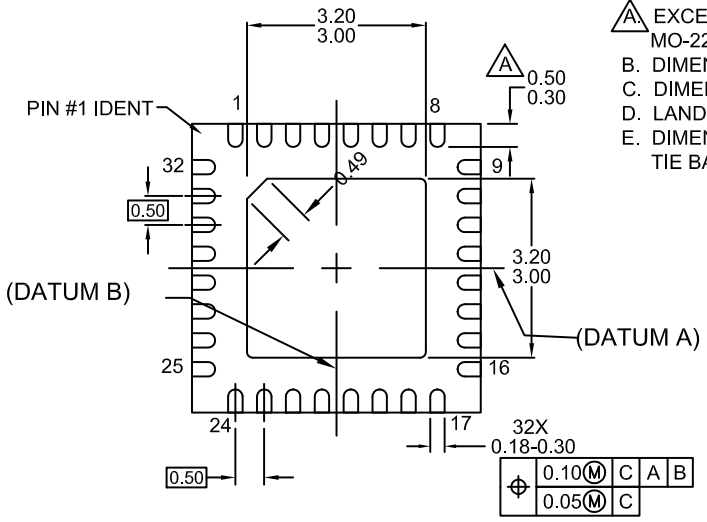

BOTTOM VIEW

NOTES:
A. EXCEPT WHERE NOTED, CONFORMS TO JEDEC REGISTRATION MO-220, VARIATION WHHD-6.
B. DIMENSIONS ARE IN MILLIMETERS.
C. DIMENSIONS AND TOLERANCES PER ASME Y14.5M-1994.
D. LAND PATTERN PER IPC SM-782.
E. DIMENSIONS ARE NOT INCLUSIVE OF BURRS, MOLD FLASH, OR TIE BAR PROTRUSIONS.

DOCUMENT NUMBER:	**98AON13637G**	Electronic versions are uncontrolled except when accessed directly from the Document Repository. Printed versions are uncontrolled except when stamped "CONTROLLED COPY" in red.	
STATUS:	**ON SEMICONDUCTOR STANDARD**		
NEW STANDARD:			
DESCRIPTION:	**WQFN32 5X5, 0.5P**		**PAGE 1 OF 2**

ISSUE	REVISION	DATE
O	RELEASED FOR PRODUCTION FROM FAIRCHILD MLP32B TO ON SEMICONDUCTOR. REQ. BY B. MARQUIS.	31 AUG 2016

ON Semiconductor and are registered trademarks of Semiconductor Components Industries, LLC (SCILLC). SCILLC reserves the right to make changes without further notice to any products herein. SCILLC makes no warranty, representation or guarantee regarding the suitability of its products for any particular purpose, nor does SCILLC assume any liability arising out of the application or use of any product or circuit, and specifically disclaims any and all liability, including without limitation special, consequential or incidental damages. "Typical" parameters which may be provided in SCILLC data sheets and/or specifications can and do vary in different applications and actual performance may vary over time. All operating parameters, including "Typicals" must be validated for each customer application by customer's technical experts. SCILLC does not convey any license under its patent rights nor the rights of others. SCILLC products are not designed, intended, or authorized for use as components in systems intended for surgical implant into the body, or other applications intended to support or sustain life, or for any other application in which the failure of the SCILLC product could create a situation where personal injury or death may occur. Should Buyer purchase or use SCILLC products for any such unintended or unauthorized application, Buyer shall indemnify and hold SCILLC and its officers, employees, subsidiaries, affiliates, and distributors harmless against all claims, costs, damages, and expenses, and reasonable attorney fees arising out of, directly or indirectly, any claim of personal injury or death associated with such unintended or unauthorized use, even if such claim alleges that SCILLC was negligent regarding the design or manufacture of the part. SCILLC is an Equal Opportunity/Affirmative Action Employer. This literature is subject to all applicable copyright laws and is not for resale in any manner.