TO−247−3LD
CASE 340CH
ISSUE O

DATE 31 OCT 2016

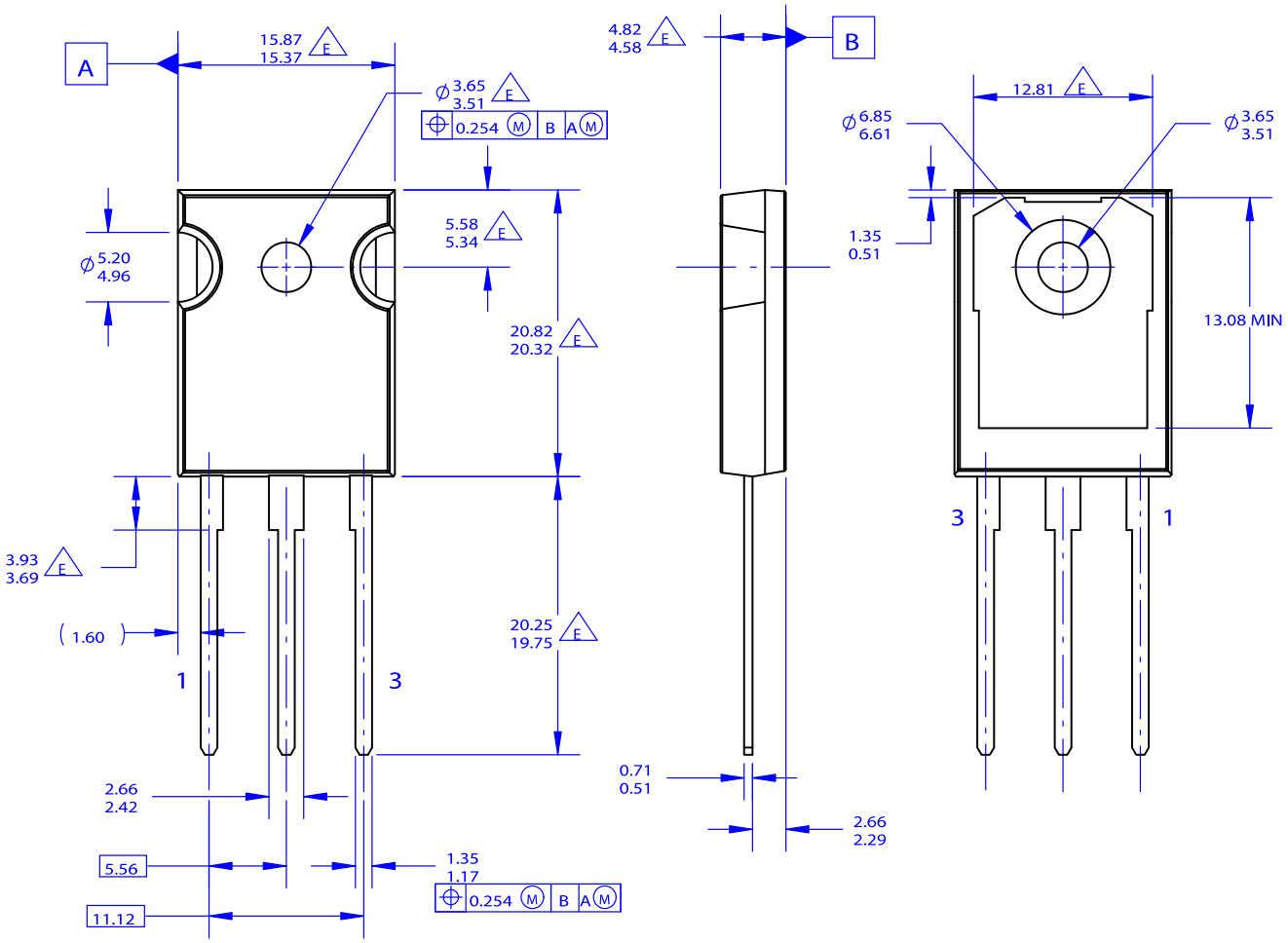

NOTES: UNLESS OTHERWISE SPECIFIED.

A. PACKAGE REFERENCE: JEDEC TO-247, ISSUE E, VARIATION AB, DATED JUNE, 2004.
B. DIMENSIONS ARE EXCLUSIVE OF BURRS, MOLD FLASH, AND TIE BAR EXTRUSIONS.
C. ALL DIMENSIONS ARE IN MILLIMETERS.
D. DRAWING CONFORMS TO ASME Y14.5 - 1994

E DOES NOT COMPLY JEDEC STANDARD VALUE

DOCUMENT NUMBER:	**98AON13853G**	Electronic versions are uncontrolled except when accessed directly from the Document Repository. Printed versions are uncontrolled except when stamped "CONTROLLED COPY" in red.
STATUS:	**ON SEMICONDUCTOR STANDARD**	
NEW STANDARD:		
DESCRIPTION:	**TO−247−3LD**	**PAGE 1 OF 2**

ISSUE	REVISION	DATE
O	RELEASED FOR PRODUCTION FROM FAIRCHILD TO247G03 TO ON SEMICONDUCTOR. REQ. BY J. LETTERMAN.	31 OCT 2016

ON Semiconductor and are registered trademarks of Semiconductor Components Industries, LLC (SCILLC). SCILLC reserves the right to make changes without further notice to any products herein. SCILLC makes no warranty, representation or guarantee regarding the suitability of its products for any particular purpose, nor does SCILLC assume any liability arising out of the application or use of any product or circuit, and specifically disclaims any and all liability, including without limitation special, consequential or incidental damages. "Typical" parameters which may be provided in SCILLC data sheets and/or specifications can and do vary in different applications and actual performance may vary over time. All operating parameters, including "Typicals" must be validated for each customer application by customer's technical experts. SCILLC does not convey any license under its patent rights nor the rights of others. SCILLC products are not designed, intended, or authorized for use as components in systems intended for surgical implant into the body, or other applications intended to support or sustain life, or for any other application in which the failure of the SCILLC product could create a situation where personal injury or death may occur. Should Buyer purchase or use SCILLC products for any such unintended or unauthorized application, Buyer shall indemnify and hold SCILLC and its officers, employees, subsidiaries, affiliates, and distributors harmless against all claims, costs, damages, and expenses, and reasonable attorney fees arising out of, directly or indirectly, any claim of personal injury or death associated with such unintended or unauthorized use, even if such claim alleges that SCILLC was negligent regarding the design or manufacture of the part. SCILLC is an Equal Opportunity/Affirmative Action Employer. This literature is subject to all applicable copyright laws and is not for resale in any manner.