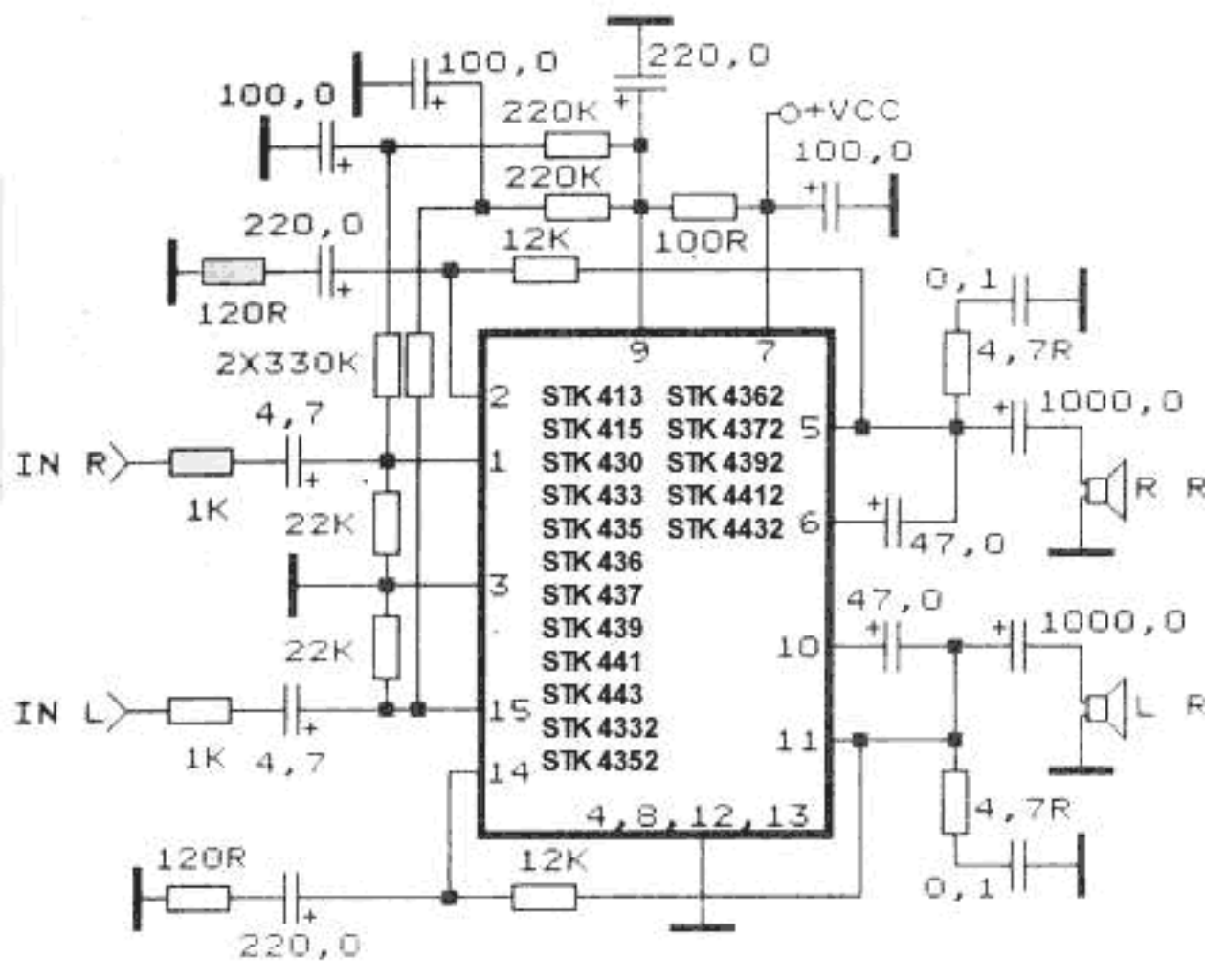
100,0
220,0
100,0
220K
+VCC
220K
100,0
220,0
12K
100R
120R
0,1
2X330K
9
7
4,7R
2
STK 413
STK 4362
4,7
STK 415
STK 4372
5
1000,0
IN R
1
STK 430
STK 4392
1K
STK 433
STK 4412
R
R
22K
STK 435
STK 4432
6
47,0
STK 436
3
STK 437
47,0
STK 439
1000,0
22K
10
STK 441
IN L
15
STK 443
L
R
1K
4,7
STK 4332
11
STK 4352
14
4,8,12,13
4,7R
120R
12K
0,1
220,0