FAIRCHILD SEMICONDUCTOR®

December 2011

FGD3440G2_F085

EcoSPARK®2 335mJ, 400V, N-Channel Ignition IGBT

Features

- SCIS Energy = 335mJ at T_J = 25°C
- Logic Level Gate Drive
- Qualified to AEC Q101
- RoHS Compliant

Applications

- Automotive Ignition Coil Driver Circuits
- Coil On Plug Applications

100% RoHS COMPLIANT

Package

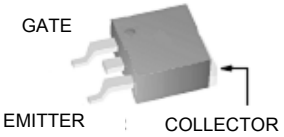

JEDEC TO-252
D-Pak

Symbol

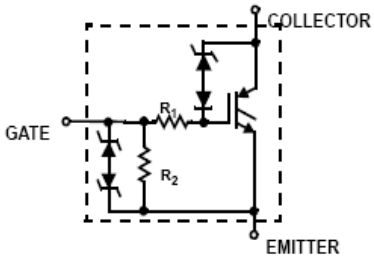

Device Maximum Ratings T_A = 25°C unless otherwise noted

Symbol	Parameter	Ratings	Units
BV_{CER}	Collector to Emitter Breakdown Voltage (I_C = 1mA)	400	V
BV_{ECS}	Emitter to Collector Voltage - Reverse Battery Condition (I_C = 10mA)	28	V
E_{SCIS25}	Self Clamping Inductive Switching Energy (Note 1)	335	mJ
$E_{SCIS150}$	Self Clamping Inductive Switching Energy (Note 2)	195	mJ
I_{C25}	Collector Current Continuous, at V_{GE} = 4.0V, T_C = 25°C	26.9	A
I_{C110}	Collector Current Continuous, at V_{GE} = 4.0V, T_C = 110°C	25	A
V_{GEM}	Gate to Emitter Voltage Continuous	±10	V
P_D	Power Dissipation Total, at T_C = 25°C	166	W
	Power Dissipation Derating, for T_C > 25°C	1.1	W/°C
T_J	Operating Junction Temperature Range	-40 to +175	°C
T_{STG}	Storage Junction Temperature Range	-40 to +175	°C
T_L	Max. Lead Temp. for Soldering (Leads at 1.6mm from case for 10s)	300	°C
T_{PKG}	Max. Lead Temp. for Soldering (Package Body for 10s)	260	°C
ESD	Electrostatic Discharge Voltage at100pF, 1500Ω	4	kV

Package Marking and Ordering Information

Device Marking	Device	Package	Reel Size	Tape Width	Quantity
FGD3440G2	FGD3440G2_F085	TO252	330mm	16mm	2500 units

Electrical Characteristics T_A = 25°C unless otherwise noted

Symbol	Parameter	Test Conditions		Min	Typ	Max	Units
Off State Characteristics							
BV_{CER}	Collector to Emitter Breakdown Voltage	I_{CE} = 2mA, V_{GE} = 0, R_{GE} = 1KΩ, T_J = -40 to 150°C		370	400	430	V
BV_{CES}	Collector to Emitter Breakdown Voltage	I_{CE} = 10mA, V_{GE} = 0V, R_{GE} = 0, T_J = -40 to 150°C		390	420	450	V
BV_{ECS}	Emitter to Collector Breakdown Voltage	I_{CE} = -20mA, V_{GE} = 0V, T_J = 25°C		28	-	-	V
BV_{GES}	Gate to Emitter Breakdown Voltage	I_{GES} = ±2mA		±12	±14	-	V
I_{CER}	Collector to Emitter Leakage Current	V_{CE} = 250V, R_{GE}=1KΩ	T_J = 25°C	-	-	25	μA
			T_J = 150°C	-	-	1	mA
I_{ECS}	Emitter to Collector Leakage Current	V_{EC} = 24V,	T_J = 25°C	-	-	1	mA
			T_J = 150°C	-	-	40	
R_1	Series Gate Resistance			-	120	-	Ω
R_2	Gate to Emitter Resistance			10K	-	30K	Ω
On State Characteristics							
$V_{CE(SAT)}$	Collector to Emitter Saturation Voltage	I_{CE} = 6A, V_{GE} = 4V,	T_J = 25°C	-	1.1	1.2	V
$V_{CE(SAT)}$	Collector to Emitter Saturation Voltage	I_{CE} = 10A, V_{GE} = 4.5V,	T_J = 150°C	-	1.3	1.45	V
$V_{CE(SAT)}$	Collector to Emitter Saturation Voltage	I_{CE} = 15A, V_{GE} = 4.5V,	T_J = 150°C	-	1.6	1.75	V
E_{SCIS}	Self Clamped Inductive Switching	L = 3.0 mHy, V_{GE} = 5V R_G = 1KΩ, (Note 1)	T_J = 25°C	-	-	335	mJ

Electrical Characteristics T_A = 25°C unless otherwise noted

Symbol	Parameter	Test Conditions		Min	Typ	Max	Units
Dynamic Characteristics							
$Q_{G(ON)}$	Gate Charge	I_{CE} = 10A, V_{CE} = 12V, V_{GE} = 5V		-	24	-	nC
$V_{GE(TH)}$	Gate to Emitter Threshold Voltage	I_{CE} = 1mA, V_{CE} = V_{GE},	T_J = 25°C	1.3	1.7	2.2	V
			T_J = 150°C	0.75	1.2	1.8	
V_{GEP}	Gate to Emitter Plateau Voltage	V_{CE} = 12V, I_{CE} = 10A		-	2.8	-	V
Switching Characteristics							
$t_{d(ON)R}$	Current Turn-On Delay Time-Resistive	V_{CE} = 14V, R_L = 1Ω		-	1.0	4	µs
t_{rR}	Current Rise Time-Resistive	V_{GE} = 5V, R_G = 1KΩ T_J = 25°C,		-	2.0	7	µs
$t_{d(OFF)L}$	Current Turn-Off Delay Time-Inductive	V_{CE} = 300V, L = 1mH,		-	5.3	15	µs
t_{fL}	Current Fall Time-Inductive	V_{GE} = 5V, R_G = 1KΩ I_{CE} =6.5A, T_J = 25°C,		-	2.3	15	µs
Thermal Characteristics							
$R_{\theta JC}$	Thermal Resistance Junction to Case			-	-	0.9	°C/W

Notes:

1: Self Clamping Inductive Switching Energy(E_{SCIS25}) of 335mJ is based on the test conditions that is starting T_J=25 °C; L=3mHy, I_{SCIS}=15A,V_{CC}=100V during inductor charging and V_{CC}=0V during the time in clamp .

2: Self Clamping Inductive Switching Energy ($E_{SCIS150}$) of 195mJ is based on the test conditions that is starting T_J=150 °C; L=3mHy, I_{SCIS}=11.4A,V_{CC}=100V during inductor charging and V_{CC}=0V during the time in clamp.

Typical Performance Curves

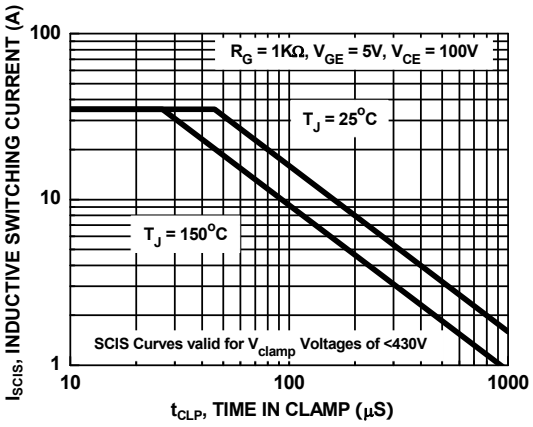

Figure 1. Self Clamped Inductive Switching Current vs. Time in Clamp

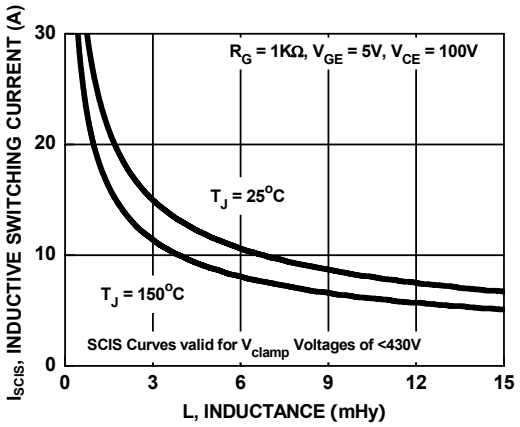

Figure 2. Self Clamped Inductive Switching Current vs. Inductance

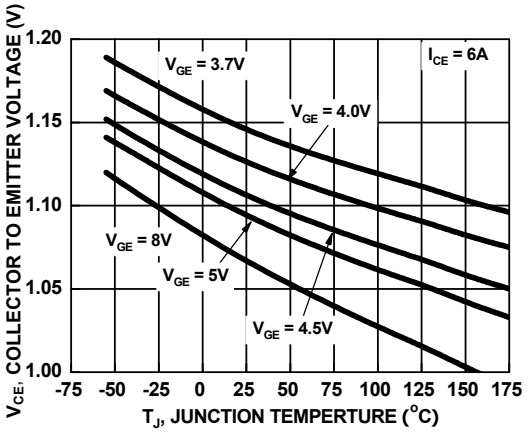

Figure 3. Collector to Emitter On-State Voltage vs. Junction Temperature

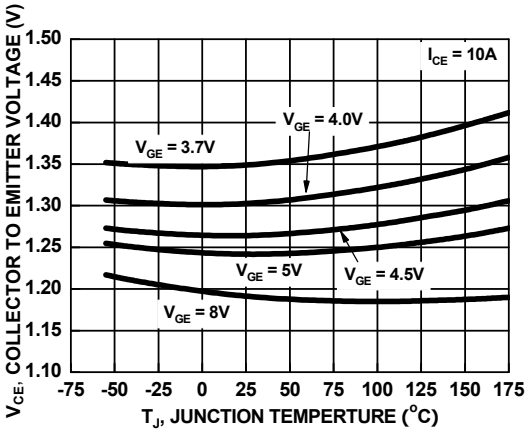

Figure 4. Collector to Emitter On-State Voltage vs. Junction Temperature

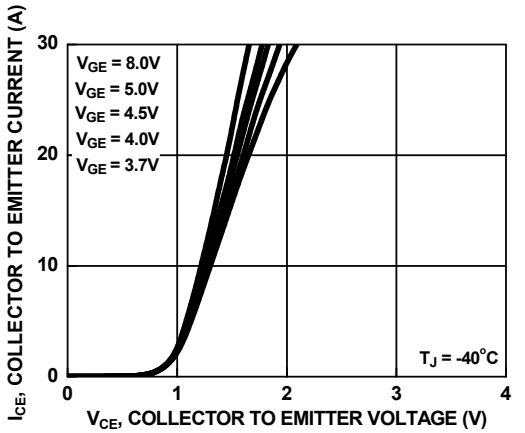

Figure 5. Collector to Emitter On-State Voltage vs. Collector Current

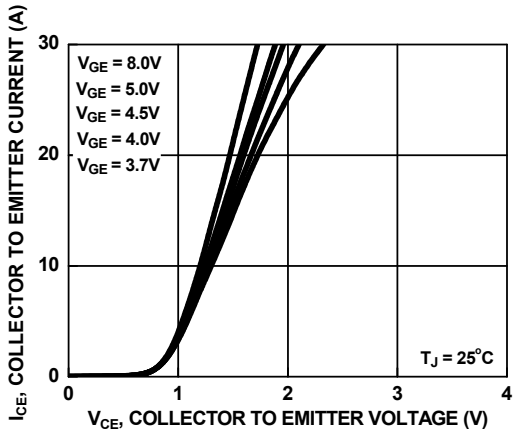

Figure 6. Collector to Emitter On-State Voltage vs. Collector Current

Typical Performance Curves (Continued)

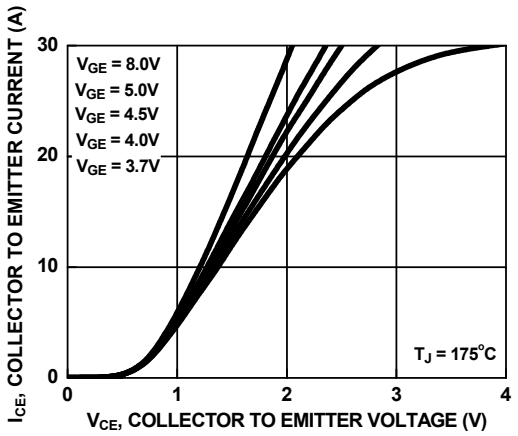

Figure 7. Collector to Emitter On-State Voltage vs. Collector Current

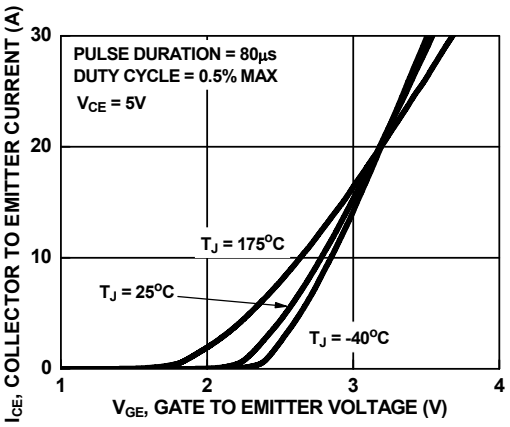

Figure 8. Transfer Characteristics

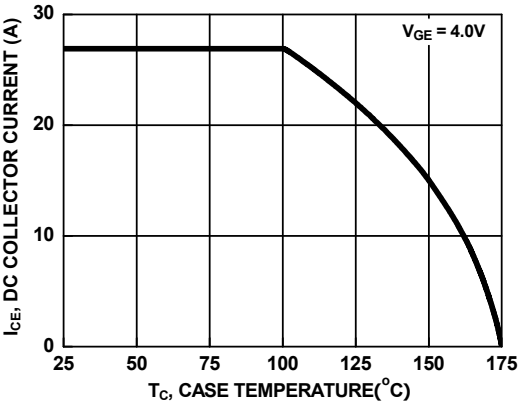

Figure 9. DC Collector Current vs. Case Temperature

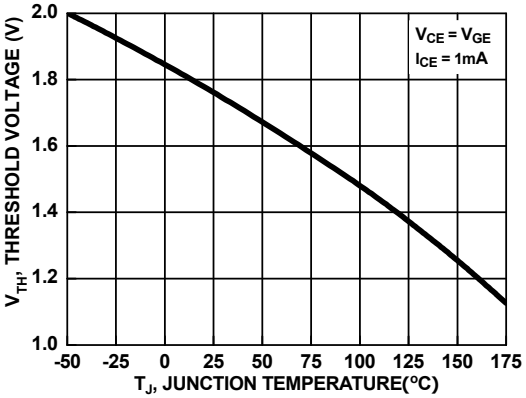

Figure 10. Threshold Voltage vs. Junction Temperature

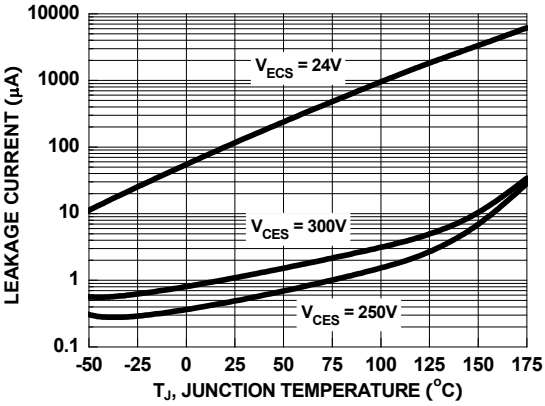

Figure 11. Leakage Current vs. Junction Temperature

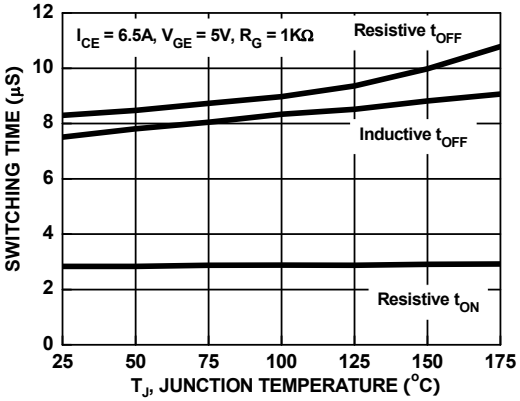

Figure 12. Switching Time vs. Junction Temperature

Typical Performance Curves (Continued)

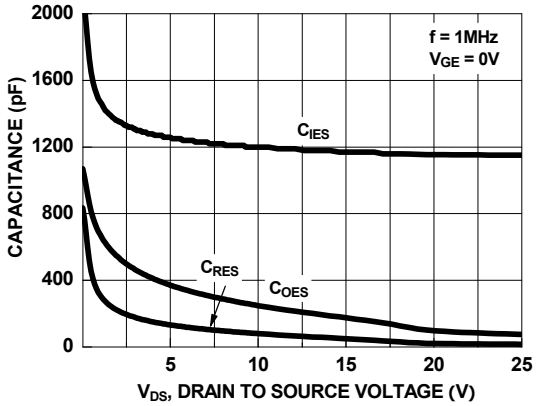

Figure 13. Capacitance vs. Collector to Emitter Voltage

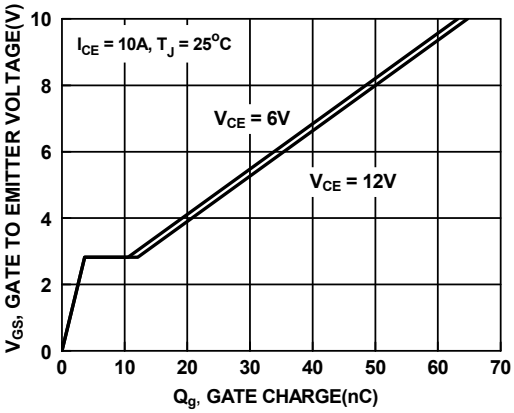

Figure 14. Gate Charge

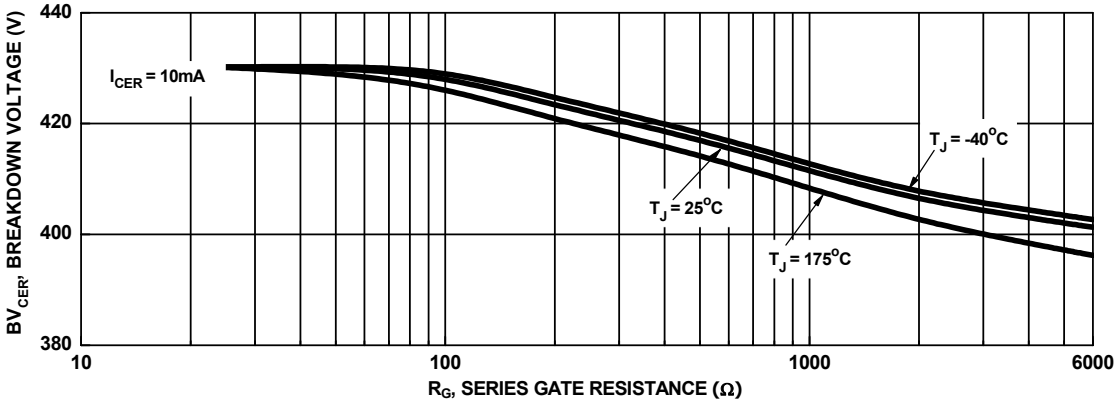

Figure 15. Break down Voltage vs. Series Gate Resistance

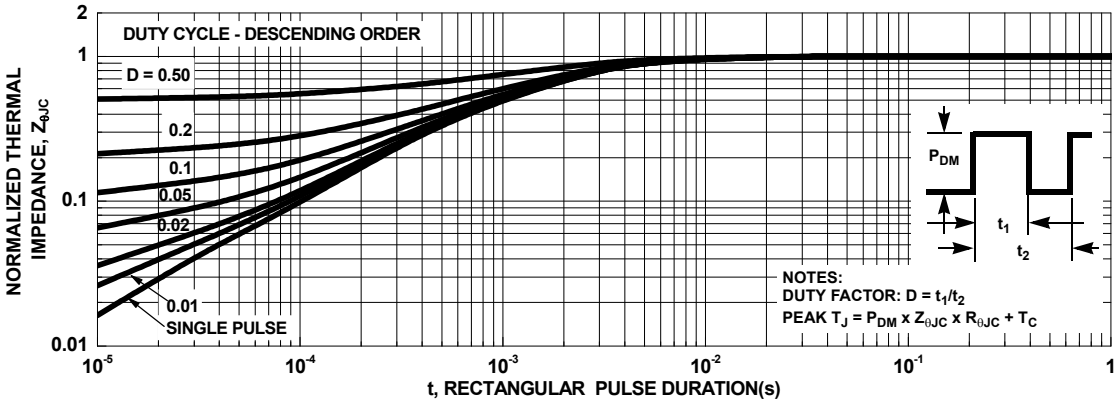

Figure 16. IGBT Normalized Transient Thermal Impedance, Junction to Case

Test Circuit and Waveforms

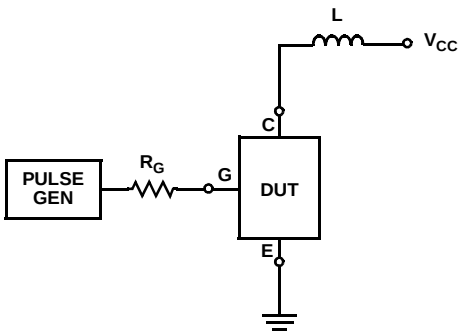

Figure 17. Inductive Switching Test Circuit

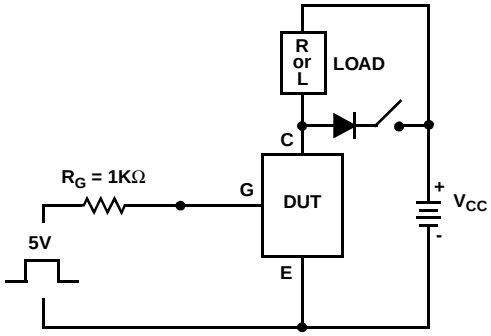

Figure 18. t_{ON} and t_{OFF} Switching Test Circuit

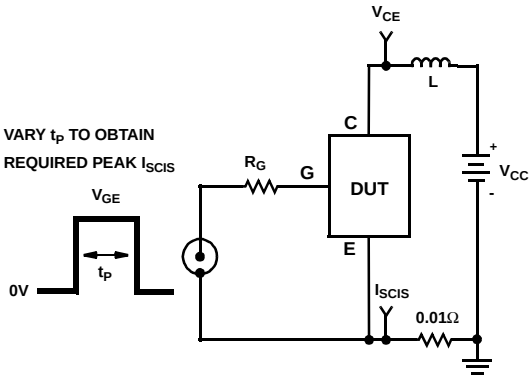

Figure 19. Energy Test Circuit

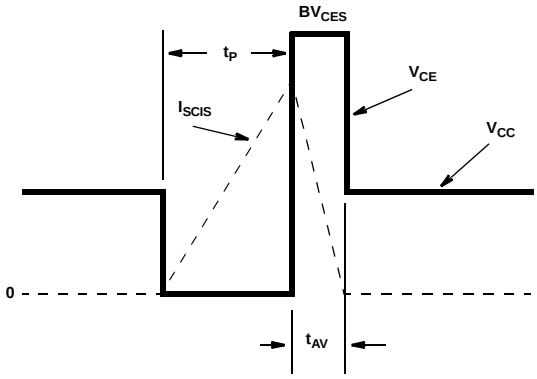

Figure 20. Energy Waveforms

Mechanical Dimensions

D-PAK

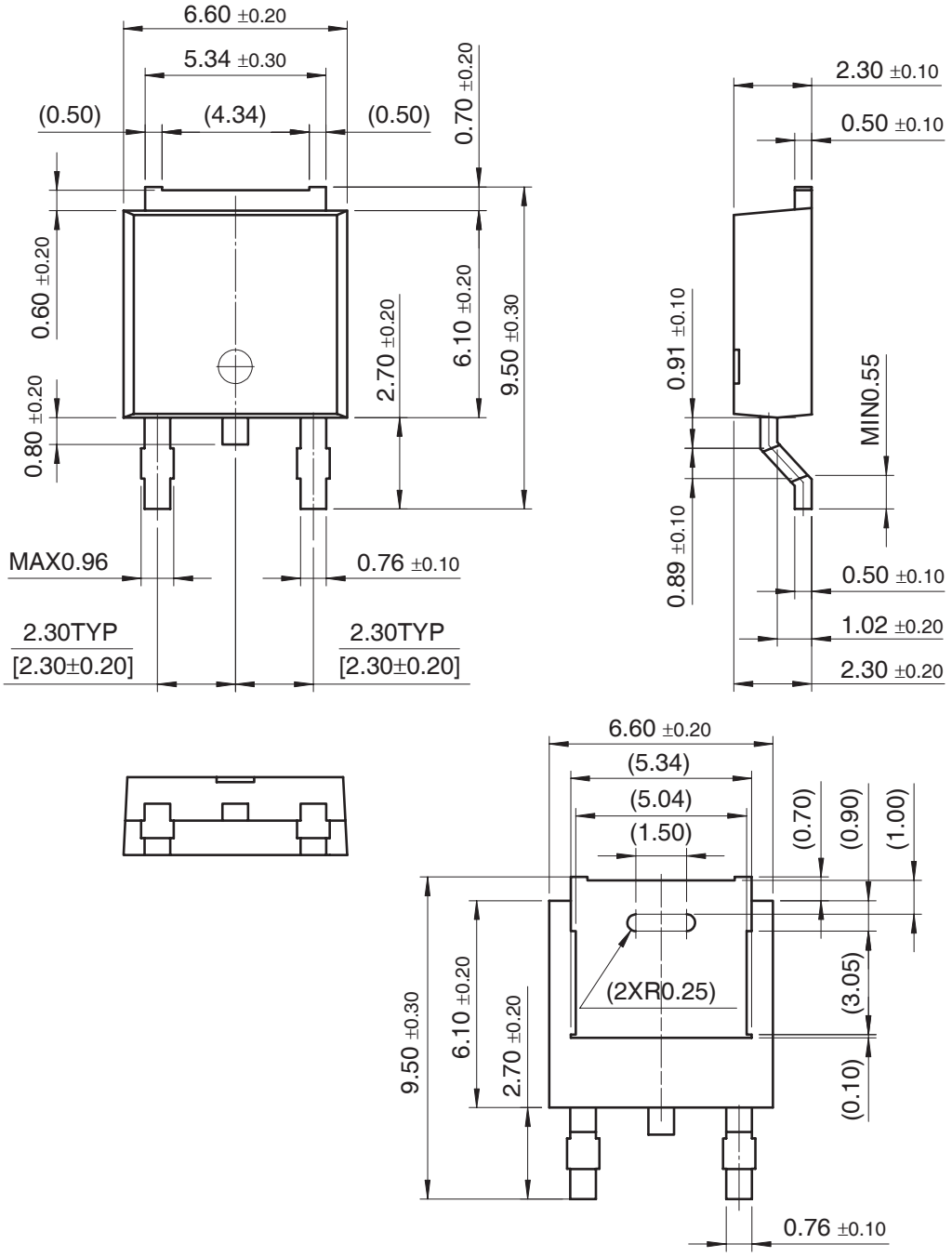

Dimensions in Millimeters

FAIRCHILD SEMICONDUCTOR®

TRADEMARKS

The following includes registered and unregistered trademarks and service marks, owned by Fairchild Semiconductor and/or its global subsidiaries, and is not intended to be an exhaustive list of all such trademarks.

2Cool™
AccuPower™
Auto-SPM™
AX-CAP™*
BitSiC®
Build it Now™
CorePLUS™
CorePOWER™
CROSSVOLT™
CTL™
Current Transfer Logic™
DEUXPEED®
Dual Cool™
EcoSPARK®
EfficentMax™
ESBC™
Fairchild®
Fairchild Semiconductor®
FACT Quiet Series™
FACT®
FAST®
FastvCore™
FETBench™
FlashWriter® *
FPS™
F-PFS™
FRFET®
Global Power Resource℠
Green FPS™
Green FPS™ e-Series™
G*max*™
GTO™
IntelliMAX™
ISOPLANAR™
MegaBuck™
MICROCOUPLER™
MicroFET™
MicroPak™
MicroPak2™
MillerDrive™
MotionMax™
Motion-SPM™
mWSaver™
OptiHiT™
OPTOLOGIC®
OPTOPLANAR®
PDP SPM™
Power-SPM™
PowerTrench®
PowerXS™
Programmable Active Droop™
QFET®
QS™
Quiet Series™
RapidConfigure™
™
Saving our world, 1mW/W/kW at a time™
SignalWise™
SmartMax™
SMART START™
SPM®
STEALTH™
SuperFET®
SuperSOT™-3
SuperSOT™-6
SuperSOT™-8
SupreMOS®
SyncFET™
Sync-Lock™
SYSTEM GENERAL ®*
The Power Franchise®
The Right Technology for Your Success™
the power franchise®
TinyBoost™
TinyBuck™
TinyCalc™
TinyLogic®
TINYOPTO™
TinyPower™
TinyPWM™
TinyWire™
TranSiC®
TriFault Detect™
TRUECURRENT®*
µSerDes™
µSerDes™
UHC®
Ultra FRFET™
UniFET™
VCX™
VisualMax™
XS™

*Trademarks of System General Corporation, used under license by Fairchild Semiconductor.

DISCLAIMER

FAIRCHILD SEMICONDUCTOR RESERVES THE RIGHT TO MAKE CHANGES WITHOUT FURTHER NOTICE TO ANY PRODUCTS HEREIN TO IMPROVE RELIABILITY, FUNCTION, OR DESIGN. FAIRCHILD DOES NOT ASSUME ANY LIABILITY ARISING OUT OF THE APPLICATION OR USE OF ANY PRODUCT OR CIRCUIT DESCRIBED HEREIN; NEITHER DOES IT CONVEY ANY LICENSE UNDER ITS PATENT RIGHTS, NOR THE RIGHTS OF OTHERS. THESE SPECIFICATIONS DO NOT EXPAND THE TERMS OF FAIRCHILD'S WORLDWIDE TERMS AND CONDITIONS, SPECIFICALLY THE WARRANTY THEREIN, WHICH COVERS THESE PRODUCTS.

LIFE SUPPORT POLICY

FAIRCHILD'S PRODUCTS ARE NOT AUTHORIZED FOR USE AS CRITICAL COMPONENTS IN LIFE SUPPORT DEVICES OR SYSTEMS WITHOUT THE EXPRESS WRITTEN APPROVAL OF FAIRCHILD SEMICONDUCTOR CORPORATION.

As used here in:

1. Life support devices or systems are devices or systems which, (a) are intended for surgical implant into the body or (b) support or sustain life, and (c) whose failure to perform when properly used in accordance with instructions for use provided in the labeling, can be reasonably expected to result in a significant injury of the user.
2. A critical component in any component of a life support, device, or system whose failure to perform can be reasonably expected to cause the failure of the life support device or system, or to affect its safety or effectiveness.

ANTI-COUNTERFEITING POLICY

Fairchild Semiconductor Corporation's Anti-Counterfeiting Policy. Fairchild's Anti-Counterfeiting Policy is also stated on our external website, www.Fairchildsemi.com, under Sales Support.

Counterfeiting of semiconductor parts is a growing problem in the industry. All manufactures of semiconductor products are experiencing counterfeiting of their parts. Customers who inadvertently purchase counterfeit parts experience many problems such as loss of brand reputation, substandard performance, failed application, and increased cost of production and manufacturing delays. Fairchild is taking strong measures to protect ourselves and our customers from the proliferation of counterfeit parts. Fairchild strongly encourages customers to purchase Fairchild parts either directly from Fairchild or from Authorized Fairchild Distributors who are listed by country on our web page cited above. Products customers buy either from Fairchild directly or from Authorized Fairchild Distributors are genuine parts, have full traceability, meet Fairchild's quality standards for handing and storage and provide access to Fairchild's full range of up-to-date technical and product information. Fairchild and our Authorized Distributors will stand behind all warranties and will appropriately address and warranty issues that may arise. Fairchild will not provide any warranty coverage or other assistance for parts bought from Unauthorized Sources. Fairchild is committed to combat this global problem and encourage our customers to do their part in stopping this practice by buying direct or from authorized distributors.

PRODUCT STATUS DEFINITIONS
Definition of Terms

Datasheet Identification	Product Status	Definition
Advance Information	Formative / In Design	Datasheet contains the design specifications for product development. Specifications may change in any manner without notice.
Preliminary	First Production	Datasheet contains preliminary data; supplementary data will be published at a later date. Fairchild Semiconductor reserves the right to make changes at any time without notice to improve design.
No Identification Needed	Full Production	Datasheet contains final specifications. Fairchild Semiconductor reserves the right to make changes at any time without notice to improve the design.
Obsolete	Not In Production	Datasheet contains specifications on a product that is discontinued by Fairchild Semiconductor. The datasheet is for reference information only.