National Semiconductor

ADC0811 8-Bit Serial I/O A/D Converter With 11-Channel Multiplexer

General Description

The ADC0811 is an 8-Bit successive approximation A/D converter with simultaneous serial I/O. The serial input controls an analog multiplexer which selects from 11 input channels or an internal half scale test voltage.

An input sample-and-hold is implemented by a capacitive reference ladder and sampled data comparator. This allows the input signal to vary during the conversion cycle.

Separate serial I/O and conversion clock inputs are provided to facilitate the interface to various microprocessors.

Features

- Separate asynchronous converter clock and serial data I/O clock.
- 11-Channel multiplexer with 4-Bit serial address logic.
- Built-in sample and hold function.
- Ratiometric or absolute voltage referencing.
- No zero or full-scale adjust required.
- Internally addressable test voltage.
- 0V to 5V input range with single 5V power supply.
- TTL/MOS input/output compatible.
- 0.3″ standard width 20-pin dip or 20-pin molded chip carrier

Key Specifications

Resolution	8-Bits
Total unadjusted error	± ½LSB and ± 1LSB
Single supply	$5V_{DC}$
Low Power	15 mW
Conversion Time	32 μS

Connection Diagrams

Dual-In-Line Package

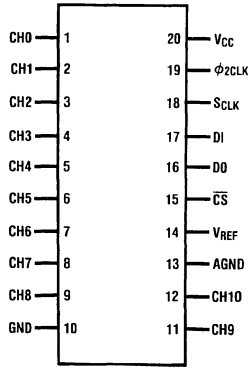

Top View

TL/H/5587–1

Molded Chip Carrier (PCC) Package

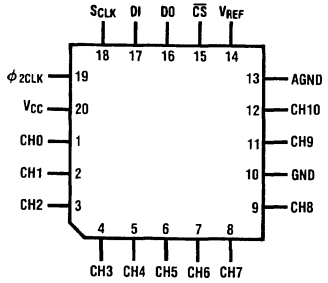

Top View

TL/H/5587–2

Order Number ADC0811J,N,V
See NS Packages J20A, N20A, V20A
Use Ordering Information

Functional Diagram

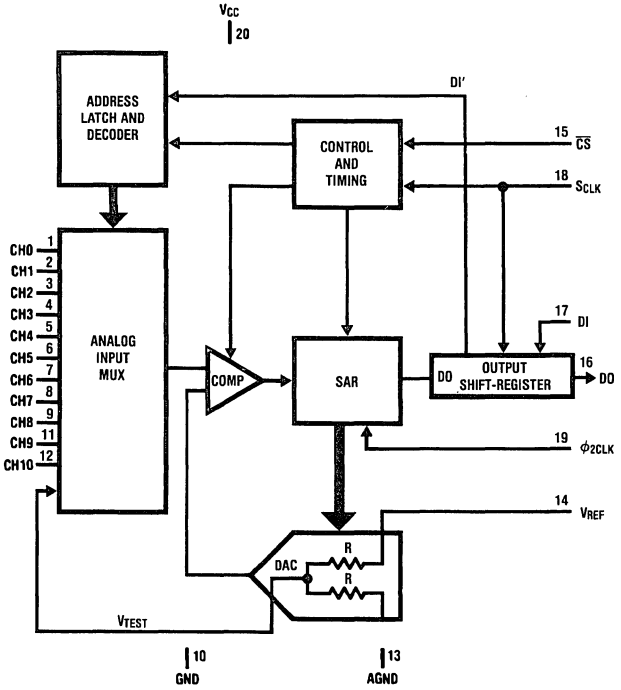

TL/H/5587–3

Absolute Maximum Ratings (Notes 1 & 2)

If Military/Aerospace specified devices are required, please contact the National Semiconductor Sales Office/Distributors for availability and specifications.

Supply Voltage (V_{CC})	6.5V
Voltage	
Inputs and Outputs	−0.3V to V_{CC} +0.3V
Input Current Per Pin (Note 3)	±5mA
Total Package Input Current (Note 3)	±20mA
Storage Temperature	−65°C to +150°C
Package Dissipation at T_A = 25°C	875 mW
Lead Temp. (Soldering, 10 seconds)	
Dual-In-Line Package (plastic)	260°C
Dual-In-Line Package (ceramic)	300°C
Molded Chip Carrier Package	
Vapor Phase (60 seconds)	215°C
Infrared (15 seconds)	220°C
ESD Susceptibility (Note 11)	2000V

Operating Ratings (Notes 1 & 2)

Supply Voltage (V_{CC})	4.5 V_{DC} to 6.0 V_{DC}
Temperature Range	$T_{MIN} \le T_A \le T_{MAX}$
ADC0811BCN, ADC0811CCN	$0°C \le T_A \le 70°C$
ADC0811BCJ, ADC0811BCV	$-40°C \le T_A \le 85°C$
ADC0811CCJ, ADC0811CCV	$-40°C \le T_A \le 85°C$
ADC0811BJ, ADC0811CJ	$-55°C \le T_A \le 125°C$

Electrical Characteristics

The following specifications apply for V_{CC} = 4.75V to 5.25V, V_{REF} = +4.6V to (V_{CC} + 0.1V), $\phi_{2\ CLK}$ = 2.097 MHz unless otherwise specified. **Boldface limits apply from T_{MIN} to T_{MAX};** all other limits $T_A = T_J$ = 25°C.

Parameter	Conditions	ADC0811BCJ, ADC0811BJ ADC0811CCJ, ADC0811CJ			ADC0811BCN, ADC0811BCV ADC0811CCN, ADC0811CCV			Units
		Typical (Note 6)	Tested Limit (Note 7)	Design Limit (Note 8)	Typical (Note 6)	Tested Limit (Note 7)	Design Limit (Note 8)	
CONVERTER AND MULTIPLEXER CHARACTERISTICS								
Maximum Total Unadjusted Error	V_{REF} = 5.00 V_{DC} (Note 4)							
ADC0811BCN, ADC0811BCV						±½	**±½**	LSB
ADC0811BCJ, ADC0811BJ			±½					LSB
ADC0811CCN, ADC0811CCV						±1	**±1**	LSB
ADC0811CCJ, ADC0811CJ			±1					LSB
Minimum Reference Input Resistance		8		**5**	8		**5**	kΩ
Maximum Reference Input Resistance		8	**11**		8	11	**11**	kΩ
Maximum Analog Input Range	(Note 5)		**V_{CC}+0.05**			V_{CC}+0.05	**V_{CC}+0.05**	V
Minimum Analog Input Range			**GND−0.05**			GND−0.05	**GND−0.05**	V
On Channel Leakage Current								
ADC0811BCJ, CCJ, BCN, CCN, BCV, CCV	On Channel = 5V Off Channel = 0V		**1000**			400	**1000**	nA
ADC0811CJ, BJ			**1000**					nA
ADC0811BCJ, CCJ, BCN, CCN, BCV, CCV	On Channel = 0V Off Channel = 5V		**−1000**			−400	**−1000**	nA
ADC0811BJ, CJ	(Note 9)		**−1000**					nA
Off Channel Leakage Current								
ADC0811BCJ, CCJ, BCN, CCN, BCV, CCV	On Channel = 5V Off Channel = 0V		**−1000**			−400	**1000**	nA
ADC0811CJ, BJ			**−1000**					nA
ADC0811BCJ, CCJ, BCN, CCN, BCV, CCV	On Channel = 0V Off Channel = 5V		**1000**			400	**1000**	nA
ADC0811BJ, CJ	(Note 9)		**1000**					nA
Minimum V_{TEST} Internal Test Voltage	V_{REF} = V_{CC}, CH 11 Selected		**125**			125	**125**	(Note 10) Counts
Maximum V_{TEST} Internal Test Voltage	V_{REF} = V_{CC}, CH 11 Selected		**130**			130	**130**	(Note 10) Counts

Electrical Characteristics

The following specifications apply for V_{CC} = 4.75V to 5.25V, V_{REF} = +4.6V to (V_{CC} + 0.1V), $\phi_{2\,CLK}$ = 2.097 MHz unless otherwise specified. **Boldface limits apply from T_{MIN} to T_{MAX};** all other limits $T_A = T_J$ = 25°C. (Continued)

Parameter	Conditions	ADC0811BCJ, ADC0811BJ ADC0811CCJ, ADC0811CJ			ADC0811BCN, ADC0811BCV ADC0811CCN, ADC0811CCV			Units
		Typical (Note 6)	Tested Limit (Note 7)	Design Limit (Note 8)	Typical (Note 6)	Tested Limit (Note 7)	Design Limit (Note 8)	
DIGITAL AND DC CHARACTERISTICS								
$V_{IN(1)}$, Logical "1" Input Voltage (Min)	V_{CC}=5.25V		**2.0**			2.0	**2.0**	V
$V_{IN(0)}$, Logical "0" Input Voltage (Max)	V_{CC}=4.75V		**0.8**			0.8	**0.8**	V
$I_{IN(1)}$, Logical "1" Input Current (Max)	V_{IN}=5.0V	0.005	**2.5**		0.005	2.5	**2.5**	μA
$I_{IN(0)}$, Logical "0" Input Current (Max)	V_{IN}=0V	−0.005	**−2.5**		−0.005	2.5	**−2.5**	μA
$V_{OUT(1)}$, Logical "1" Output Voltage (Min)	V_{CC}=4.75V I_{OUT}=−360 μA I_{OUT}=−10 μA		**2.4** **4.5**			2.4 4.5	**2.4** **4.5**	V V
$V_{OUT(0)}$, Logical "0" Output Voltage (Max)	V_{CC}=5.25V I_{OUT}=1.6 mA		**0.4**			0.4	**0.4**	V
I_{OUT}, TRI-STATE Output Current (Max)	V_{OUT}=0V V_{OUT}=5V	−0.01 0.01	**−3** **3**		−0.01 0.01	−3 3	**−3** **3**	μA μA
I_{SOURCE}, Output Source Current (Min)	V_{OUT}=0V	−12	**−6.5**		−14	−6.5	**−6.5**	mA
I_{SINK}, Output Sink Current (Min)	V_{OUT}=V_{CC}	18	**8.0**		16	8.0	**8.0**	mA
I_{CC}, Supply Current (Max)	$\overline{CS}$=1, V_{REF} Open	1	**2.5**		1	2.5	**2.5**	mA
I_{REF} (Max)	V_{REF}=5V	**0.7**	**1**		**0.7**	1	**1**	mA

AC CHARACTERISTICS

Parameter		Conditions	Typical (Note 6)	Tested Limit (Note 7)	Design Limit (Note 8)	Units
$\phi_{2\,CLK}$, ϕ_2 Clock Frequency	MIN		0.70		**1.0**	MHz
	MAX		3.0	2.0	**2.1**	
S_{CLK}, Serial Data Clock Frequency	MIN				**5.0**	KHz
	MAX		700	525	**525**	
T_C, Conversion Process Time	MIN	Not Including MUX Addressing and Analog Input Sampling Times	48		**48**	ϕ_2 cycles
	MAX		64		**64**	
t_{ACC}, Access Time Delay From $\overline{CS}$ Falling Edge to DO Data Valid	MIN				**1**	ϕ_2 cycles
	MAX				**3**	
$t_{SET\text{-}UP}$, Minimum Set-up Time of $\overline{CS}$ Falling Edge to S_{CLK} Rising Edge					$4/\phi_{2CLK} + \frac{1}{2\,S_{CLK}}$	sec
$t_{H\overline{CS}}$, $\overline{CS}$ Hold Time After the Falling Edge of S_{CLK}					**0**	ns
$t_{\overline{CS}}$, Total $\overline{CS}$ Low Time	MIN				$t_{set\text{-}up} + 8/S_{CLK}$	sec
	MAX				$t_{\overline{CS}}(min) + 48/\phi_{2CLK}$	sec
t_{HDI}, Minimum DI Hold Time from S_{CLK} Rising Edge			0		**0**	ns
t_{HDO}, Minimum DO Hold Time from S_{CLK} Falling Edge		R_L=30k, C_L=100 pF			**10**	ns

Electrical Characteristics

The following specifications apply for V_{CC} = 4.75V to 5.25V, V_{REF} = +4.6V to (V_{CC} + 0.1V), $\phi_{2\,CLK}$ = 2.097 MHz unless otherwise specified. **Boldface limits apply from T_{MIN} to T_{MAX};** all other limits $T_A = T_J$ = 25°C. (Continued)

Parameter	Conditions		Typical (Note 6)	Tested Limit (Note 7)	Design Limit (Note 8)	Units
AC CHARACTERISTICS (Continued)						
t_{SDI}, Minimum DI Set-up Time to S_{CLK} Rising Edge			200		**400**	ns
t_{DDO}, Maximum Delay From S_{CLK} Falling Edge to DO Data Valid	R_L = 30k, C_L = 100 pF		180	400	**400**	ns
t_{TRI}, Maximum DO Hold Time, ($\overline{CS}$ Rising edge to DO TRI-STATE)	R_L = 3k, C_L = 100 pF		90	150	**150**	ns
t_{CA}, Analog Sampling Time	After Address Is Latched $\overline{CS}$ = Low				**$4/S_{CLK}$ + 1 μs**	sec
t_{RDO}, Maximum DO Rise Time	R_L = 30 kΩ,	"TRI-STATE" to "HIGH" State	75	150	**150**	ns
	C_L = 100 pf	"LOW" to "HIGH" State	150	300	**300**	
t_{FDO}, Maximum DO Fall Time	R_L = 30 kΩ,	"TRI-STATE" to "LOW" State	75	150	**150**	ns
	C_L = 100 pf	"HIGH" to "LOW" State	150	300	**300**	
C_{IN}, Maximum Input Capacitance	Analog Inputs, ANO–AN10 and V_{REF}		11		**55**	pF
	All Others		5		**15**	

Note 1: Absolute Maximum Ratings indicate limits beyond which damage to the device may occur. DC and AC electrical specifications do not apply when operating the device beyond its specified operating conditions.

Note 2: All voltages are measured with respect to ground.

Note 3: Under over voltage conditions (V_{IN}<0V and V_{IN}>V_{CC}) the maximum input current at any one pin is ±5 mA. If the voltage at more than one pin exceeds V_{CC} + .3V the total package current must be limited to 20 mA. For example the maximum number of pins that can be over driven at the maximum current level of ±5 mA is four.

Note 4: Total unadjusted error includes offset, full-scale, linearity, multiplexer, and hold step errors.

Note 5: Two on-chip diodes are tied to each analog input, which will forward-conduct for analog input voltages one diode drop below ground or one diode drop greater than V_{CC} supply. Be careful during testing at low V_{CC} levels (4.5V), as high level analog inputs (5V) can cause this input diode to conduct, especially at elevated temperatures, and cause errors for analog inputs near full-scale. The spec allows 50 mV forward bias of either diode. This means that as long as the analog V_{IN} does not exceed the supply voltage by more than 50 mV, the output code will be correct. To achieve an absolute 0 V_{DC} to 5 V_{DC} input voltage range will therefore require a minimum supply voltage of 4.950 V_{DC} over temperature variations, initial tolerance and loading.

Note 6: Typicals are at 25°C and represent most likely parametric norm.

Note 7: Guaranteed and 100% production tested under worst case condition.

Note 8: Guaranteed, but not 100% production tested. These limits are not used to calculate outgoing quality levels.

Note 9: Channel leakage current is measured after the channel selection.

Note 10: 1 count = V_{REF}/256.

Note 11: Human body model, 100 pF discharged through a 1.5 kΩ resistor.

Test Circuits

Leakage Current

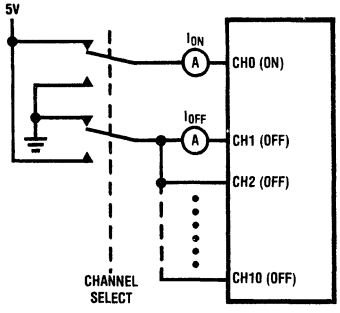

TL/H/5587–17

D0 Except "TRI-STATE"

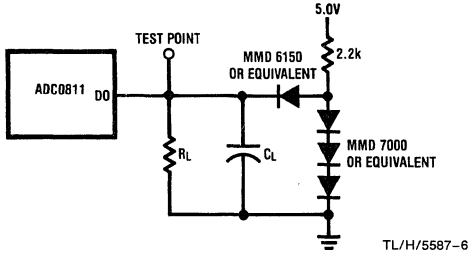

TL/H/5587–6

Test Circuits (Continued)

t_{TRI} "TRI-STATE"

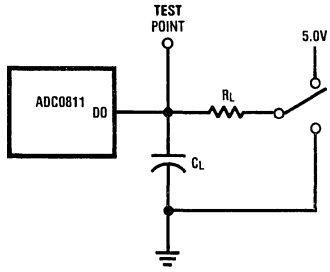

TL/H/5587–22

Typical Performance Characteristics

Unadjusted Offset Error vs V_{REF} Voltage

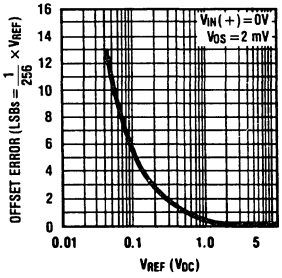

Linearity Error vs V_{REF} Voltage

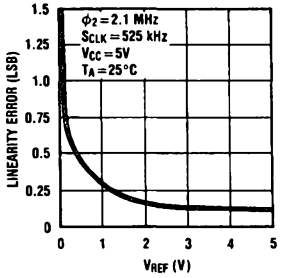

Output Current vs Temperature

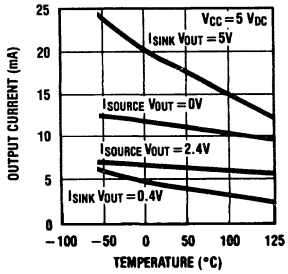

Linearity vs Temperature

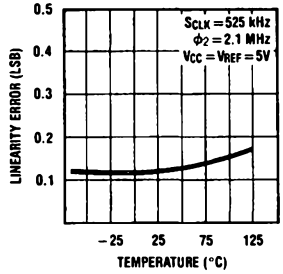

Linearity vs ϕ_2 Clock Frequency

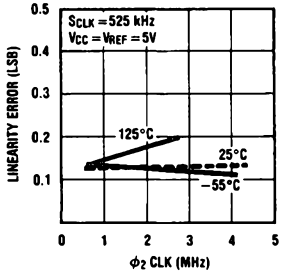

Power Supply Current vs Temperature

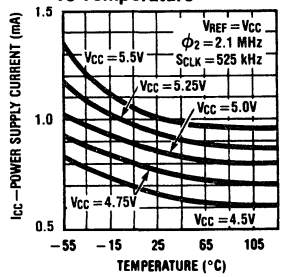

Power Supply Current vs ϕ_2 Clock Frequency

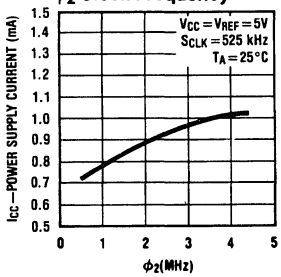

Resistive Ladder Reference Current vs Temperature

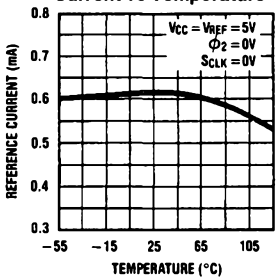

TL/H/5587–16

Timing Diagrams

D0 "TRI-STATE" Rise & Fall Times

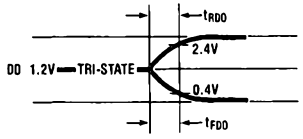

TL/H/5587–13

D0 Low to High State

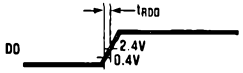

TL/H/5587–14

D0 High to Low State

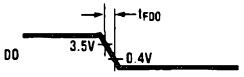

TL/H/5587–15

Timing with a continuous S_{CLK}

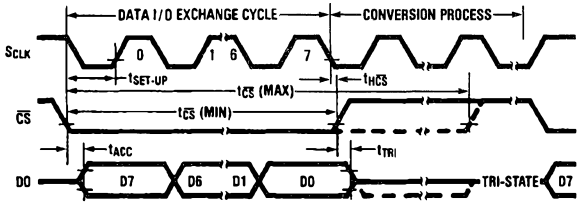

TL/H/5587–11

*Strobing $\overline{CS}$ High and Low will abort the present conversion and initiate a new serial I/O exchange.

Timing with a gated S_{CLK} and $\overline{CS}$ Continuously Low

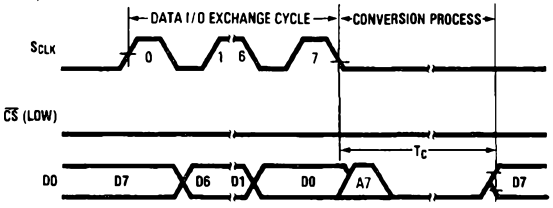

TL/H/5587–9

Using $\overline{CS}$ To TRI-STATE D0

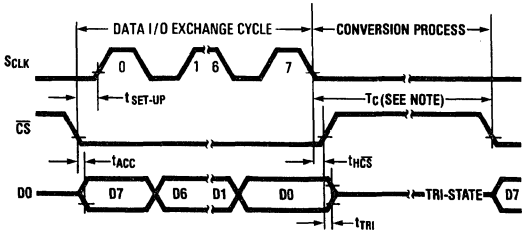

TL/H/5587–10

Note: Strobing $\overline{CS}$ Low during this time interval will abort the conversion in process.

Timing Diagrams (Continued)

$\overline{CS}$ High During Conversion

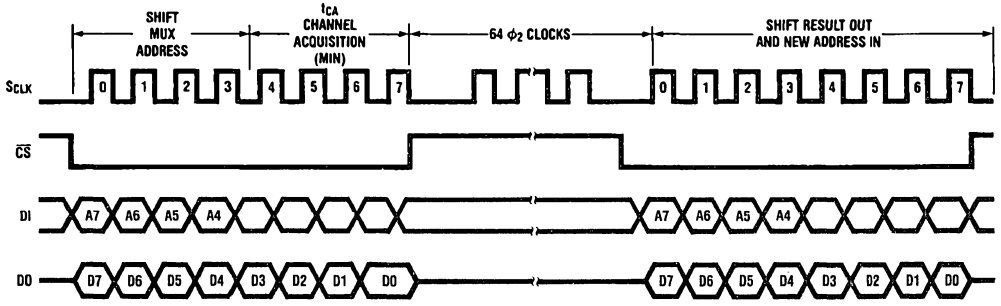

TL/H/5587-4

$\overline{CS}$ Low During Conversion

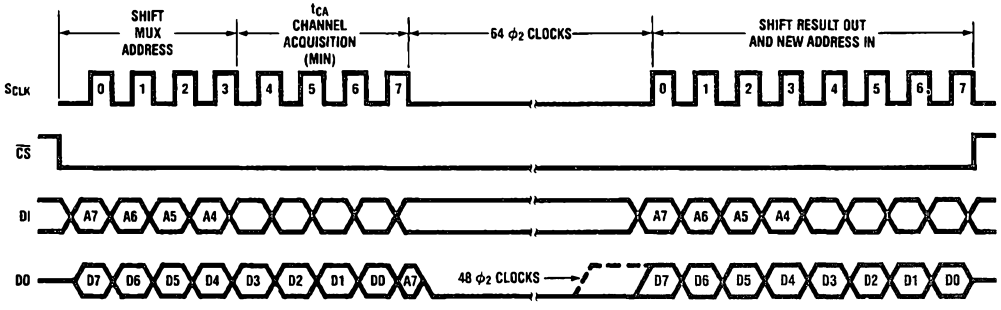

TL/H/5587-5

Note: DO and DI lines share the 8-bit I/O shift register(see Functional Block Diagram). Since the MUX address bits are shifted in on S_{CLK} rising edges while S_{CLK} falling edges shift out conversion data on DO, the eighth falling edge of S_{CLK} will shift out the MSB MUX address bit (A7) on DO. Thus, if addressing channels CH8–CH10, a high DO will occur momentarily (one ϕ_2 clock period) until the 8-bit I/O shift register is cleared by the internal EOC signal.

Channel Addressing Table

TABLE I. ADC 0811 Channel Addressing

MUX ADDRESS								ANALOG CHANNEL SELECTED
A_7	A_6	A_5	A_4	A_3	A_2	A_1	A_0	
0	0	0	0	X	X	X	X	CH0
0	0	0	1	X	X	X	X	CH1
0	0	1	0	X	X	X	X	CH2
0	0	1	1	X	X	X	X	CH3
0	1	0	0	X	X	X	X	CH4
0	1	0	1	X	X	X	X	CH5
0	1	1	0	X	X	X	X	CH6
0	1	1	1	X	X	X	X	CH7
1	0	0	0	X	X	X	X	CH8
1	0	0	1	X	X	X	X	CH9
1	0	1	0	X	X	X	X	CH10
1	0	1	1	X	X	X	X	V_{TEST}
1	1	X	X	X	X	X	X	LOGIC TEST MODE*

* Analog channel inputs CH0 thru CH3 are logic outputs

Functional Block Diagram

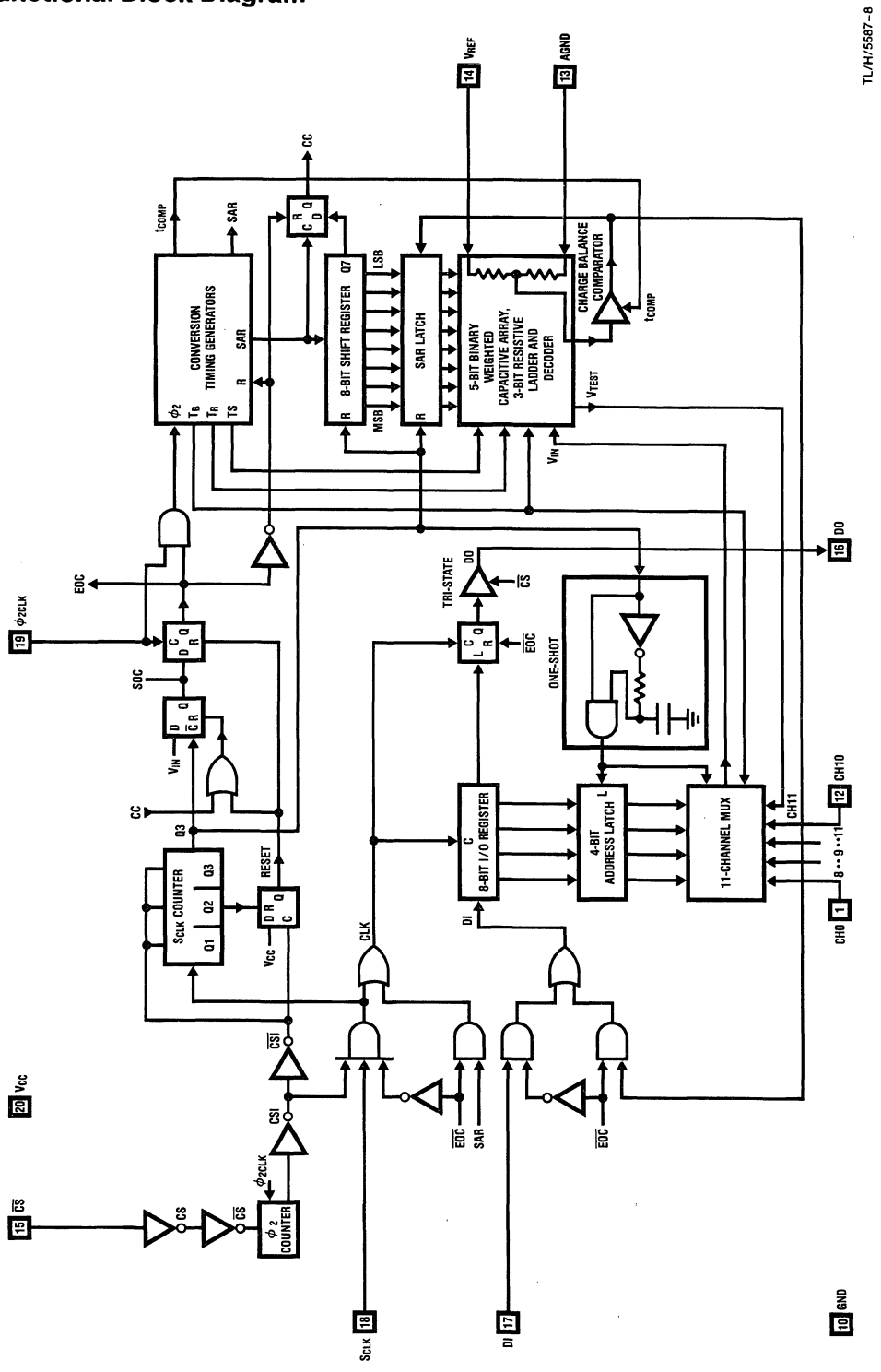

Functional Description

1.0 DIGITAL INTERFACE

The ADC0811 uses five input/output pins to implement the serial interface. Taking chip select ($\overline{CS}$) low enables the I/O data lines (DO and DI) and the serial clock input (S_{CLK}). The result of the last conversion is transmitted by the A/D on the DO line, while simultaneously the DI line receives the address data that selects the mux channel for the next conversion. The mux address is shifted in on the rising edge of S_{CLK} and the conversion data is shifted out on the falling edge. It takes eight S_{CLK} cycles to complete the serial I/O. A second clock (ϕ_2) controls the SAR during the conversion process and must be continuously enabled.

1.1 CONTINUOUS S_{CLK}

With a continuous S_{CLK} input $\overline{CS}$ must be used to synchronize the serial data exchange (see *Figure 1*). The ADC0811 recognizes a valid $\overline{CS}$ one to three ϕ_2 clock periods after the actual falling edge of $\overline{CS}$. This is implemented to ensure noise immunity of the $\overline{CS}$ signal. Any spikes on $\overline{CS}$ less than one ϕ_2 clock period will be ignored. $\overline{CS}$ must remain low during the complete I/O exchange which takes eight S_{CLK} cycles. Although $\overline{CS}$ is not immediately acknowledged for the purpose of starting a new conversion, the falling edge of $\overline{CS}$ immediately enables DO to output the MSB (D7) of the previous conversion.

The first S_{CLK} rising edge will be acknowledged after a set-up time ($t_{set\text{-}up}$) has elapsed from the falling edge of $\overline{CS}$. This and the following seven S_{CLK} rising edges will shift in the channel address for the analog multiplexer. Since there are 12 channels only four address bits are utilized. The first four S_{CLK} cycles clock in the mux address, during the next four S_{CLK} cycles the analog input is selected and sampled. During this mux address/sample cycle, data from the last conversion is also clocked out on DO. Since D7 was clocked out on the falling edge of $\overline{CS}$ only data bits D6–D0 remain to be received. The following seven falling edges of S_{CLK} shift out this data on DO.

The 8th S_{CLK} falling edge initiates the beginning of the A/D's actual conversion process which takes between 48 to 64 ϕ_2 cycles (T_C). During this time $\overline{CS}$ can go high to TRI-STATE DO and disable the S_{CLK} input or it can remain low. If $\overline{CS}$ is held low a new I/O exchange will not start until the conversion sequence has been completed, however once the conversion ends serial I/O will immediately begin. Since there is an ambiguity in the conversion time (T_C) synchronizing the data exchange is impossible. Therefore $\overline{CS}$ should go high before the 48th ϕ_2 clock has elasped and return low after the 64th ϕ_2 to synchronize serial communication.

A conversion or I/O operation can be aborted at any time by strobing $\overline{CS}$. If $\overline{CS}$ is high or low less than one ϕ_2 clock it will be ignored by the A/D. If the $\overline{CS}$ is strobed high or low between 1 to 3 ϕ_2 clocks the A/D may or may not respond. Therefore $\overline{CS}$ must be strobed high or low greater than 3 ϕ_2 clocks to ensure recognition. If a conversion or I/O exchange is aborted while in process the consequent data output will be erroneous until a complete conversion sequence has been implemented.

1.2 DISCONTINUOUS S_{CLK}

Another way to accomplish synchronous serial communication is to tie $\overline{CS}$ low continuously and disable S_{CLK} after its 8th falling edge (see *Figure 2*). S_{CLK} must remain low for

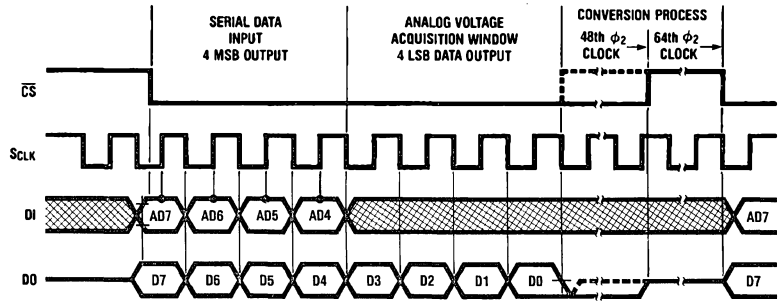

TL/H/5587–18

FIGURE 1

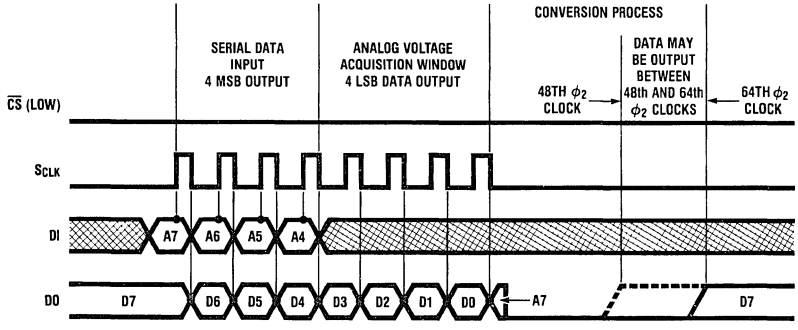

TL/H/5587–19

FIGURE 2

Functional Description (Continued)

at least 64 ϕ_2 clocks to insure that the A/D has completed its conversion. If S_{CLK} is enabled sooner, synchronizing to the data output on DO is not possible since an end of conversion signal from the A/D is not available and the actual conversion time is not known. With $\overline{CS}$ low during the conversion time (64 ϕ_2 max) DO will go low after the eighth falling edge of S_{CLK} and remain low until the conversion is completed. Once the conversion is through DO will transmit the MSB. The rest of the data will be shifted out once S_{CLK} is enabled as discussed previously.

If $\overline{CS}$ goes high during the conversion sequence DO is tristated, and the result is not affected so long as $\overline{CS}$ remains high until the end of the conversion.

1.2 MULTIPLEXER ADDRESSING

The four bit mux address is shifted, MSB first, into DI. Input data corresponds to the channel selected as shown in table 1. Care should be taken not to send an address greater than or equal to twelve (11XX) as this puts the A/D in a digital testing mode. In this mode the analog inputs CH0 thru CH3 become digital outputs, for our use in production testing.

2.0 ANALOG INPUT

2.1 THE INPUT SAMPLE AND HOLD

The ADC0811's sample/hold capacitor is implemented in its capacitive ladder structure. After the channel address is received, the ladder is switched to sample the proper analog input. This sampling mode is maintained for 1 μsec after the eighth S_{CLK} falling edge. The hold mode is initiated with the start of the conversion process. An acquisition window of $4t_{S_{CLK}} + 1$ μsec is therefore available to allow the ladder capacitance to settle to the analog input voltage. Any change in the analog voltage before or after the acquisition window will not effect the A/D conversion result.

In the most simple case, the ladder's acquisition time is determined by the R_{on} (3K) of the multiplexer switches and the total ladder capacitance (90pf). These values yield an acquisition time of about 2 μsec for a full scale reading. Therefore the analog input must be stable for at least 2 μsec before and 1 μsec after the eighth S_{CLK} falling edge to ensure a proper conversion. External input source resistance and capacitance will lengthen the acquisition time and should be accounted for.

Other conventional sample and hold error specifications are included in the error and timing specs of the A/D. The hold step and gain error sample/hold specs are taken into account in the ADC0811's total unadjusted error, while the hold settling time is included in the A/D's max conversion time of 64 ϕ_2 clock periods. The hold droop rate can be thought of as being zero since an unlimited amount of time can pass between a conversion and the reading of data. However, once the data is read it is lost and another conversion is started.

Typical Applications

ADC0811-INS8048 INTERFACE

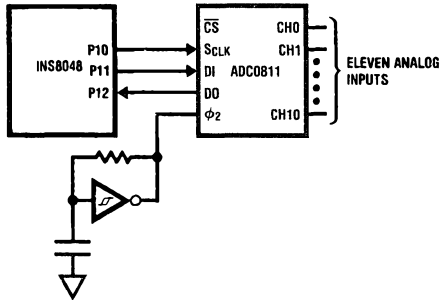

TL/H/5587–21

ADC0811 FUNCTIONAL CIRCUIT

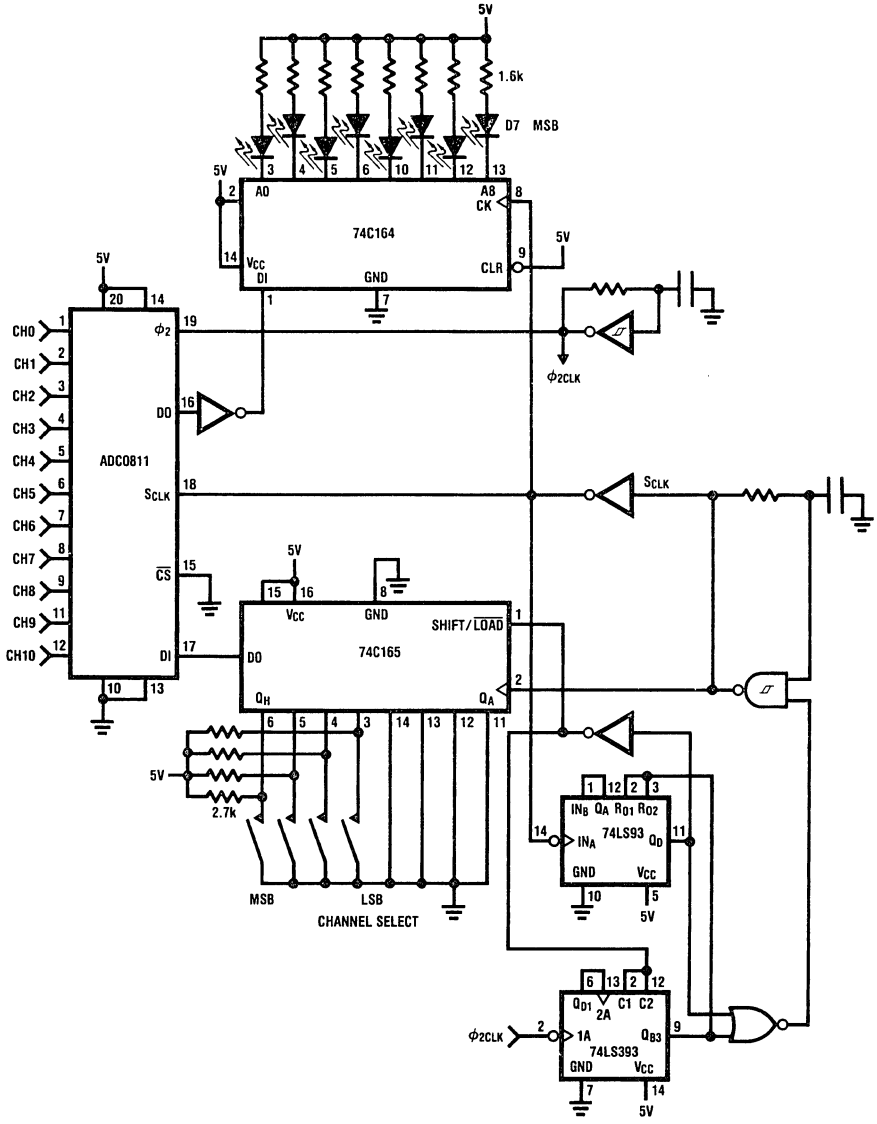

Ordering Information

Temperature Range		0°C to 70°C	−40°C to +85°C	−55°C to +125°C
Total Unadjusted Error	±½ LSB	ADC0811BCN	ADC0811BCJ ADC0811BCV	ADC0811BJ
	±1 LSB	ADC0811CCN	ADC0811CCJ ADC0811CCV	ADC0811CJ
Package Outline		N20A	J20A, V20A	J20A